September 2015
Online Print Version

International Journal of latest Research in Engineering and Technology (IJLRET)

Print Version, Volume 01, Issue 04
September 2015 Edition
ISSN 2454-5031

IJLRET
www.ijlret.com
International Journal of latest Research in Engineering and Technology (IJLRET)

GENERAL INFORMAION:

IJLRET, International Journal of Latest Research in Engineering and Technology publish monthly journal under ISSN 2454-5031.

All the respective authors are the sole owner and responsible of published research and research papers are published after full consent of respective author or co-author(s). For any discussion on research subject or research matter, the reader should directly contact to undersigned authors.

COPYRIGHT

DISCLAIMER

Contact Information:

Editor: editor@ijlret.com
Website: http://www.ijlret.com

International Journal of latest Research in Engineering and Technology (IJLRET)

Volume 01, Issue 04
September 2015 Edition
ISSN 2454-5031

Contents

International Journal of Latest Research in Engineering and Technology (IJLRET)
ISSN: 2454-5031(Online)
www.ijlret.com‖ Volume 1 Issue 4‖September 2015 ‖ PP 01-09

Thermoelectric power backup for Scooters for Emergency operation

Adhithya K[1], Jagannath S [2]
[1](*Electrical and Electronics Engineering, Sri Sairam Engineerring College, Chennai, India)*
[2](*Electrical and Electronics Engineering, Sri Sairam Engineerring College, Chennai, India)*

ABSTRACT : *The idea of this project is to utilise the waste heat energy being generated in scooters. It involves tapping the heat energy being generated at the exhaust in scooters and convert to electrical energy. The amount of heat energy and the temperature is being sensed by the thermocouple and monitored. It is converted to electrical energy by the device called Thermoelectric Generator which works on Seebeck effect. The electric potential produced in thermoelectric generator is boosted by the boost converter thereby increasing the magnitude of voltage, required for charging battery. Further, the battery is used to run the vehicle during low fuel, by closing fuel valve.*

KEYWORDS - *thermoelectric generator, thermocouple, Seebeck effect, electric potential.*

I. INTRODUCTION

In the present world, the vehicles are being used for commuting from one place to another. Even a common man in the society is in need of vehicles even for very short distances. These vehicles were considered once a luxury, but now it is a necessity. These vehicles provide an easy way for commuting from one place to another. The maximum number of vehicles runs primarily fossil fuels like petrol, diesel, etc. Only few of them run by solar power, etc. The fossil fuels are available naturally. These fuels, upon combustion, produce heat energy to run the automobiles. The fossil fuels are obtained as the products like petrol, diesel, gasoline, etc. obtained by the extraction of crude petroleum.

Now-a-days, many vehicles are being designed to run without fossil fuels and run on other sources of energy. But the efficiency of these vehicles running on other sources may be lesser than those vehicles running on fossil fuels. The power required to run these vehicles may not be sufficient to travel for long distances and in with the present technology, other than fossil fuels. Hence, the idea of this project is to couple the fossil fuel system and the use of electric power to run the vehicles. Normally in a vehicle, a large amount of heat energy is being generated at the exhaust. This heat energy is the result of combustion of fossil fuels, where a major portion of heat energy is being utilised and the remaining portion of heat is disposed through silencers. This heat energy though cannot be fully utilised, can be absorbed to maximum and can be used for producing electricity by a device called thermoelectric generator (TEG). This thermoelectric generator converts the waste heat energy to electrical energy. This electrical energy produced by the TEG module, upon boosting, can be used to run the vehicle during emergency conditions like low fuel, etc to support movement to nearest fuel station.

II. THERMAL ENERGY

The heat is a form of energy that is generated at the heat sources which include sun, induction stove, vehicle exhausts, etc. A major portion of heat energy can be obtained from the waste heat sources which can be continuously harnessed for producing the energy usable for human beings. Normally in any heat energy system, if there is a physical pathway, the heat flows from hotter junction to a colder junction. This process of flow results in an increase in entropy. The heat refers to the process of transfer, and it does not have relation with the property of the system. It has no relation with the energy contained in the system. In a conducting system, when the heat is applied to one point, all the molecules in the system absorb the applied heat energy and transfer it to the colder junction. At a particular stage, the other junction also gets heated and will have the same temperature as that of hot junction. This property is common in conducting materials like metals, where each atom in the metal absorbs and transfers heat from one point to another point.

The SI unit of heat energy is Joules (J). This quantity of heat energy can be measured by calorimetry, or it can also be determined by the calculations based on other quantities, relying on the first law of thermodynamics. There are three different types of heat energy transfer, namely conduction, convection and radiaton. There is an emission of heat when various processes are being undergone in the system. But the magnitude of heat energy generated at various sources is different; which implies that the temperature of these operating equipments is not the same. Some of the devices emitting heat energy include heat engine and heat pump. This heat energy when it is being exposed to the atmosphere can result in pollution, and many organisms

cannot sustain this heat. Hence, the waste heat energy being exposed can be trapped and converted to electrical energy, which can be used by human beings.

III. THERMOELECTRIC POWER

The electrical energy that is obtained from the heat source is called thermoelectric energy. This thermoelectric energy can be harnessed from the waste heat sources, depending upon the amount of heat energy being generated at the heat source. The devices designed to generate thermoelectric emf works on the principle of Seebeck effect. The Seebeck effect states that, "When the two ends of a conducting element are maintained at different temperatures, the electrons at the hot junction diffuse into the cold junction". The two ends in the device form two junctions that are maintained at different temperatures. This temperature difference between the two junctions results in the generation of thermo-emf. Hence, the magnitude of the thermo-emf depends on the maximum difference in temperature between the two junctions. The thermo-emf can be calculated as $e = \alpha\Delta T$, where α is the Seebeck coefficient and ΔT is the temperature difference, which can be calculated as $\Delta T = T_h - T_c$, where T_h is the temperature of the hot junction and T_c is the temperature of the cold junction.

The magnitude and sign of the thermo-emf depends on the material of the conductor and the temperatures at the hot and cold junctions. The different pairs of metals are being arranged in series to form the thermoelectric series. The element Sb generates the higher value of thermo emf compared to other metals.

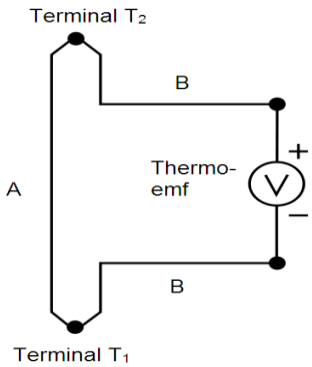

Fig (1) Seebeck effect

IV. THERMOCOUPLE

The thermocouple is a device which is made up of two dissimilar metals. These two dissimilar metals are joined to form the thermocouple. This thermocouple works on the principle of Seebeck effect. The emf being generated is called thermoelectric emf or seebeck voltage and the current generated is called thermoelectric current. The voltage generated by the thermocouple is extremely small and it is measured in terms of millivolts (one millivolt is equal to one thousandth of a volt). There are several methods of joining the two dissimilar metals. One is to weld the wires together. This produces a brittle joint, and if not protected from stresses, this type of thermocouple can fracture and break apart. During the welding process gases from the welding can diffuse into the metal and cause a change in the characteristic of the thermocouple. Another method of joining the two dissimilar metals is to solder the wires together. This has the disadvantage of introducing a third dissimilar metal. Fortunately, if both sides of the thermocouple are at the same temperature, the Seebeck voltage due to thermocouple action between the two metals of the thermocouple and the solder will have equal and opposite voltages and the effect will cancel. A more significant disadvantage is that the thermocouple is a desirable transducer for measuring high temperatures. In many cases the temperatures to be measured are higher than the melting point of the solder and the thermocouple will come apart. The thermocouples are of three different types namely base metal thermocouple, noble metal thermocouple and refractory metal thermocouples. Based on the thermocouple application, they can be further classified as type E, J, K, N, T, etc.

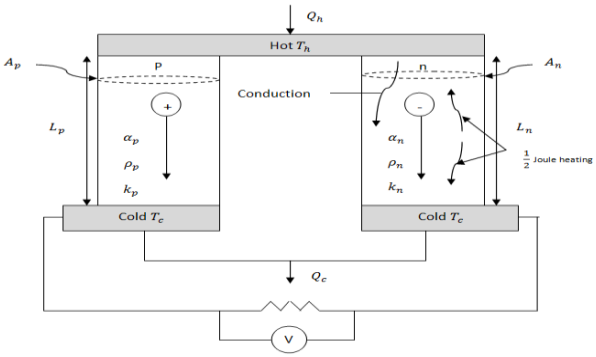

Fig (2) Single thermocouple model

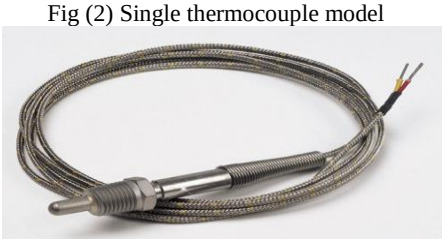

Fig (3) Thermocouple

V. THERMOELECTRIC GENERATOR

The thermoelectric generator is a device used to convert the heat energy into electrical energy. It works on the principle of Seebeck effect. The Thermo-electric generator module has two semiconductor materials, which are referred as the Seebeck cells or thermo elements. This module has semiconductor thermo elements that are connected electrically in series for elevating the resulting voltage and due to the temperature difference between the walls of the plate; the energy that is captured from the thermally excited electrons. A single thermocouple comprises of two thermo elements namely p-type and n-type elements. The themo-elements of the n-type and p-type semiconductors are connected thermally in parallel and electrically in series. The parameters of the TEG module at different temperatures are as shown below.

TABLE I. PARAMETERS OF THE MODULE AT DIFFERENT TEMPERATURES

Parameter	**Value**	
Hot side temperature (°C)	25°C	50°C
Q_{max} (Watts)	3.5	3.9
T_{max} (°C)	67	75
I_{max} (A)	3.0	3.0
V_{max} (V)	1.9	2.2
Module Resistance (Ω)	0.58	0.66

The TEG module can be used for the generation of electric power, whenever power shortage occurs. The efficiency of the thermo element depends on the value of resistance of load and the property of the semiconducting material used. Many TEG modules are made up of Bismuth Telluride (Bi_2Te_3) semiconductor. The heat flowing from one surface of the module involves three effects: heat associated with Seebeck effect, the half of Joule heating and thermal conduction of the semiconductor materials. The heterogeneous material composition inside the thermo elements and the dissimilar geometry introduces dissimilarity in both p-type and n-type materials and so the analysis of dissimilar elements is considered during calculation. The electric circuit defining the Seebeck coefficient of the p-type and n-type is given as $\alpha = \alpha_p - \alpha_n$, where α_p and α_n are the Seebeck coefficients of p type and n type material respectively.

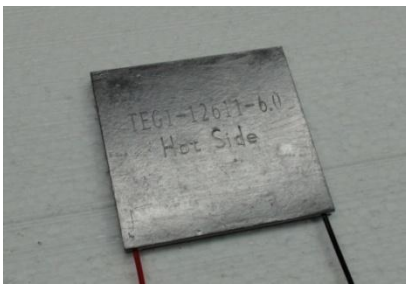

Fig (4) Thermoeletric generator

VI. EXPERIMENTAL SETUP

The experimental setup for the project is explained as shown. In this project, the Thermoelectric Generator (TEG) modules are placed at the heat source, which absorbs the heat. The output voltage from the TEG is boosted by a boost converter to around 12 V. This boosted voltage charges the battery to around 12 V. This battery charged from the boost voltage is used to operate the hub motor, for running the vehicle. The battery charges during the heat generated from the vehicle, whenever, the fuel level in the vehicle is low, the solenoid valve closes the fuel tank, and the battery operates for running the vehicle. The block diagram for the project is as shown in the fig (5).

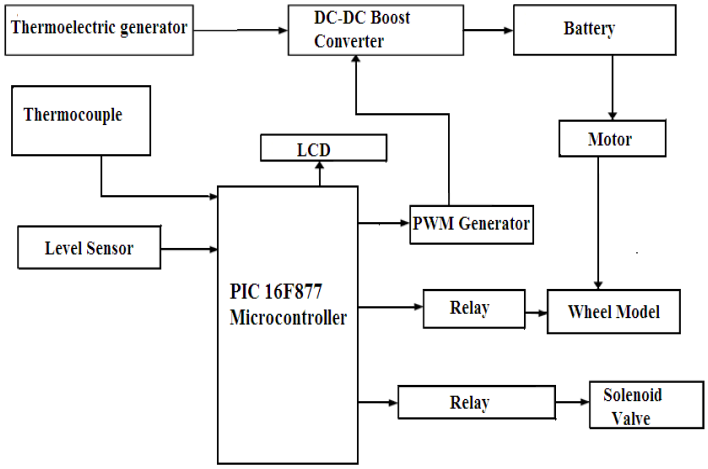

Fig (5) Block diagram of project

A. *Thermocouple Model:* The thermocouple is a device that works on the principle of Seebeck effect, as explained above. The thermocouple is made up of two dissimilar metals forming a junction. This emf produced from the thermocouple is amplified by the amplifier circuit, which consists of an IC LM324. This LM324 is a low power quad operational amplifier, which is used for signal conditioning application. In this project, it is used to provide the information about the temperature difference at the source. This operational amplifier IC consists of four operational amplifier circuits, thereby the number of power supplies and individual Op-Amps for this thermocouple unit is are reduced. The IC is provided 12 V supply for operation and there are limiting resistors and capacitors for current limitation and filtering ripples, etc. The input emf produced from the thermocouple is sensed and amplified b this IC and it provides the information about the temperature of the heat source. The thermocouple model circuit is as shown below.

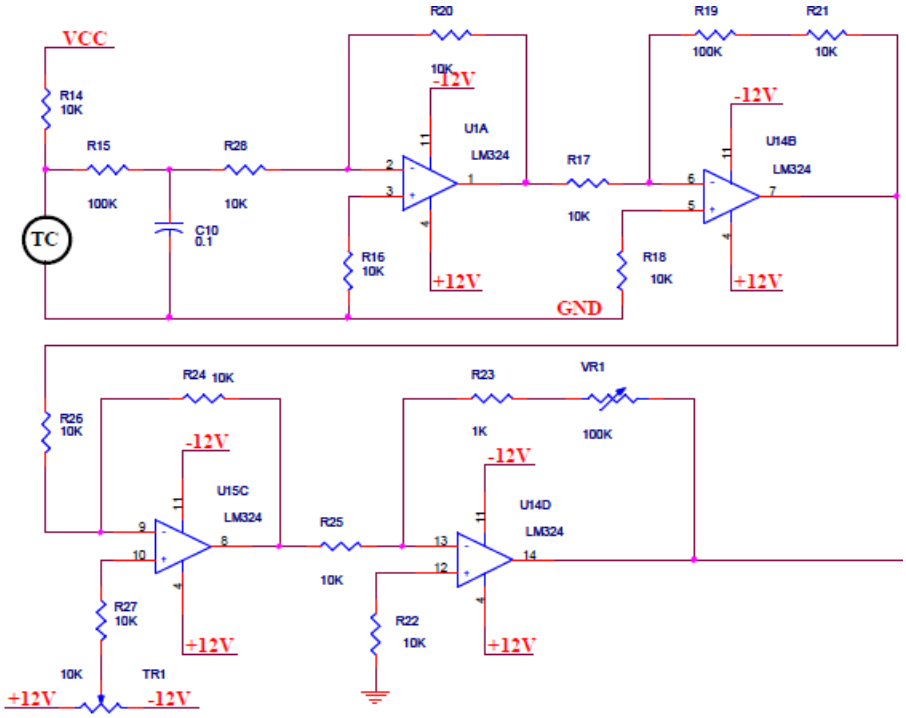

Fig (6) Thermocouple model circuit

B. Boost Converter : The boost converter is a power electronic circuit, which is used to step up or increase the magnitude of the input voltage provided. It converts the fixed DC input voltage into variable DC output voltage. The boost converter is used in this project for charging the batter of 12 V. The boost converter consists of an inductor, a diode and a transistor. The transistor is used for switching purpose. In this project, MOSFET is the transistor used for switching. This MOSFET consists of three terminals namely Gate, Source and drain. The PWM pulses are provided to the gate terminal of the MOSFET, by the MOSFET driver circuit. This MOSFET driver circuit consists of two bipolar junction transistors (BJT), in which, one transistor is pnp transistor and the other is npn transistors. They are connected in such a way that they provide pulses by switching alternatively. This operation of MOSFET driver circuit is controlled by PIC16F877 microcontroller. This driver circuit is connected to pin 40 of the PIC microcontroller. The inductor is used to store the energy from the supply and based on MOSFET switching; the energy from inductor is delivered to the system. The diode is used to enhance the flow of current in single direction. The circuit diagram for the boost converter is as shown below.

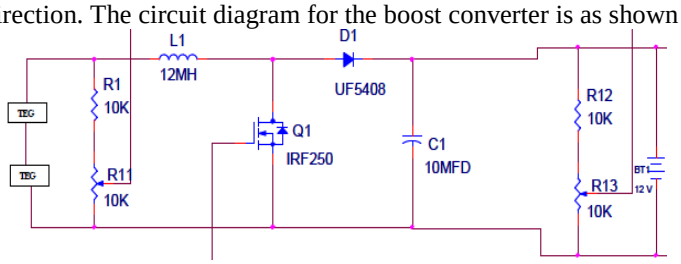

Fig (7) Boost Converter circuit

C. Storage Unit: The storage unit is a device capable of storing charges. The battery is normally used as the charge storing unit. The batteries used as storage unit is normally a rechargeable battery, as it is capable of storing the charges. In this project, the lead acid battery is used as the rechargeable battery. This lead acid battery consists of anode made of lead (Pb) and cathode made up of lead oxide PbO_2. A number of lead plates are connected in parallel and the lead oxide plates are adjacent to lead by insulators like rubber or glass fiber. The electrolyte used is dil. Sulphuric acid (dil. H_2SO_4) of density 1.30 g/ml. During the process of charging, the current from the boost converter is applied to this battery, in which the normal electrode reaction is reversed. The chemical reaction is as shown.

$$2PbSO_{4(s)} + 2H_2O + \text{Energy} \xrightarrow{\text{charging}} Pb_{(s)} + PbO_{2(s)} + 2H_2SO_{4(eq)}$$

During discharging, the reaction between lead and lead oxide in the presence of dil Sulphuric acid yields lead sulphate as the precipitate and 2 electrons are being produced. The reaction is as shown below.

$$Pb_{(s)} + PbO_{2(s)} + 2H_2SO_{4(aq)} \xrightarrow{\text{discharging}} 2PbSO_{4(s)} + 2H_2O + \text{Energy}$$

This energy produced from the battery is used to run the vehicles during emergency conditions.

D. *Wheel and Motor model:* The motor is used for the movement of the vehicle from place to place. The motor used for this project is the hub motor. The hub motor is an electric motor that is incorporated into the wheels and drives directly. The electromagnetic fields of the hub motor are supplied to the stationary windings of the motor. The outer part of the motor follows, or tries to follow, those fields, turning the attached wheel. The energy is transferred in a brushless motor electronically, eliminating physical contact between stationary and moving parts. This brushless motor is more efficient compared to the brushed motor configuration. These hub motors are installed between the hubs at the front wheel of the scooter. The hub motors are available in different configurations; here this hub motor is used to operate at 12 V.

Fig (8) Hub motor

E. *Microcontroller:* The microcontroller is the device used to control the whole process in the circuit. In this project the PIC microcontroller is used. The PIC microcontroller, also known as the peripheral interface controller, is used to control all the process in this circuit. This controller plays a major role in providing the PWM pulses to the MOSFET driver circuit. The commonly used PIC microcontroller is PIC16F877. The core features include high performance PISC CPU, eight level deep hardware stack, low power consumption (around 2mA, for 5V, 4MHz), wide operating voltage range. This microcontroller is a 40 pin device, with 5 ports present. The port A has 6 pins, port B, port C and port D have 8 pins respectively while port E has only 3 pins. The port E pins are individually configurable as inputs or outputs; they also have Schmitt triggered input buffers. These buffers act as Schmitt triggered inputs, when they are configured as external interrupts, whey are used in serial programming modes, when they are configured as general purpose inputs and TTL input and when operated in Parallel Slave Port Mode. For the peripheral functions of the device, some pins of this microcontroller are multiplexed with alternate function.

PROPERTIES OF PIC MICROCONTROLLER

Device	**Program Flash**	**DATA memory**	**DATA EEPROM**
PIC 16F877	8K	368 Bytes	256 Bytes

The pins 2 and 3 of this microcontroller are connected to the boost converter with resistances R11 and R13 of magnitude 10 kΩ. The thermocouple input is provided at pin 4 of microcontroller. The pin 1 is the reset pin, and the pins 11 and 32 are provided the supply of 5V. The corresponding pins 31 and 12 are grounded. The pins 13 and 14 are connected to the crystal oscillator. The pin 40 of microcontroller provides the triggering for producing PWM pulses to the MOSFET driver circuit. The pins 19, 20, 21, 22, 27, 28, 29, 30 are connected to 16x2 LCD display. The voltage measurement from the source and the boost converter are monitored and measured. The temperature of the heat source is measured and monitored from the thermocouple circuit in this microcontroller. The wiring of PIC16F877 microcontroller is as shown below.

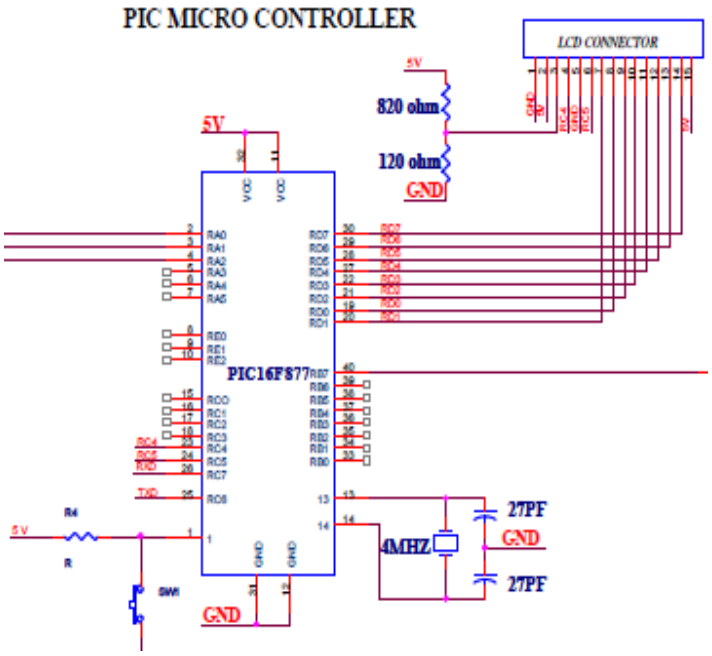

Fig (9) Microcontroller circuit

VII. WORKING

The heat from the source is generated in the scooters due to the combustion of fuels in it. This temperature is sensed by a device called thermocouple. The thermoelectric generator modules are normally present at the silencers, which generate a lot of heat during combustion. When present in the silencers, it produces a thermo-emf due to the difference in temperatures based on the principle of Seebeck effect. This output emf from the thermoelectric generator is boosted by the boost converter circuit, thereby increases the magnitude of the input voltage. The fixed input DC voltage is converted to a variable DC voltage, which is used to charge a battery. During the combustion process, the fuel level at each stage is monitored by the fuel level sensor. When the fuel level falls to a minimum value, the solenoid of the fuel tank closes by the relay operation and simultaneously, the vehicle is switched to run in electric mode by the charged battery. This operation is supported during emergency condition like low fuel for movement for smaller distances. The closing of solenoid, the operation of vehicle through battery and PWM pulses for the boost converter circuit is monitored by the PIC microcontroller. The sample vehicle model for placing components is as shown below.

Fig (10) Vehicle model

VIII. RESULTS

The magnitude input voltage obtained depends on the temperature of the heat source. Different TEG modules can be selected for power generation, depending on the performance and the temperature range of the source. For the temperature T_h=50°C, the performance curves shall be obtained as,

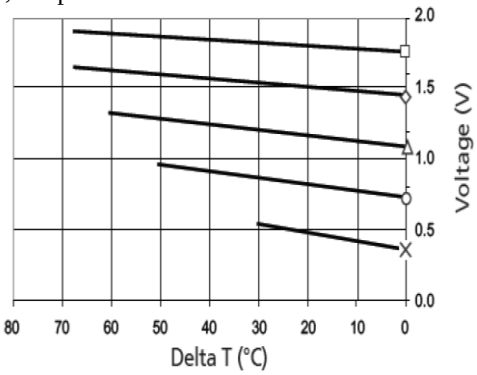

Fig (10) Performance curves at T_h=50°C

The magnitude of the increase in input voltage depends on the amount of difference of temperature obtained at the heat source. The temperature difference versus voltage graph is plotted as shown.

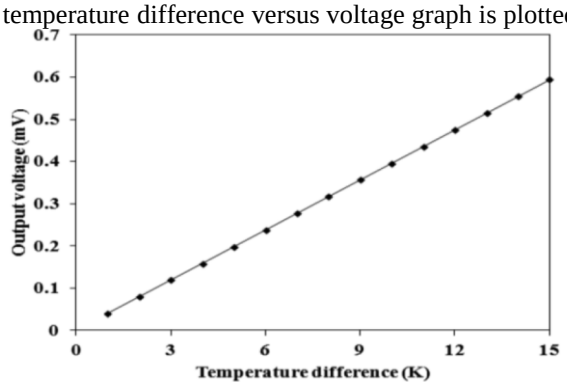

Fig (11) Temperature difference vs voltage

The input voltage is boosted by the boost converter circuit. The Simulink model for the whole circuit is developed and the simulation is done in the MATLAB. The output waveform for voltages and currents in the boost converter shall be obtained as shown.

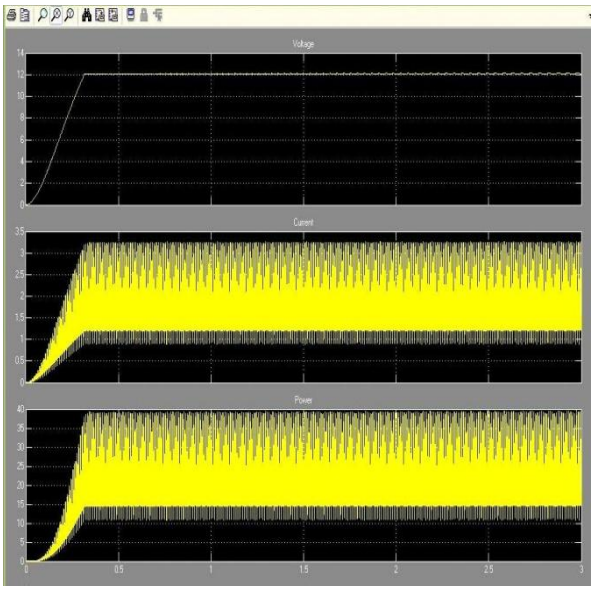

Fig (12) Boost Converter output

The output from boost converter is used to charge the batter and run the hub motor during emergency situation. The hardware output shall be obtained as.

Fig (13) Hardware Output

REFERENCES

[1] Chang-Hao Piao, Qing Teng, Xing-Yi Wu and Sheng Lu, "*Study of Energy Harvesting System Based on Seebeck Effect"*, International Journal of Advances in Sceince and Technology (IJAST), ISSN 2348-5426, Pages 45-50.

[2] Risha Mal, Rajendra Prasad, Virendra Kumar Vijay, Amit Ranjan, Ratnesh Tiwari, "*Thermoelectric Power Generator Integrated Cookstove: A Sustainable Approach of Waste Heat to Energy Conversion",* International Journal of Research in Engineering and Technology (IJRET), Volume 3, Special Issue 12, June 2014, Pages 35-40.

[3] AP Rammohan, Manjunath Swamy HM, "*Home Made Electricity from Gas stove",* International Journal of Engineering Research and Development (IJERD), Volume 8, Issue 6, September 2013, Pages 29-34.

[4] Omar Abdel-Rahim, Mohamed Orabi, Emad Abdelkarim, Mahrous Ahmed and Mohamed Z. Youssef, " *Switched Inductor Boost Converter for PV applications",* Institute of Electrical and Electronics Engineers (IEEE) 2012, 978-1-4577-1216-6, Pages 2100-2106.

[5] Borrnert, T, Burki, T, *"Waste heat conversion into electricity",* Institute of Electrical and Electronics Engineers, Cement Industry Technical Conference, 2010 IEEE-IAS/PCA 52nd, Pages 1-8.

[6] Dr.R.Seyezhai, V.Aarthi, *"Comparison of Interleaved Boost Converter Topologies with Voltage Multiplier for Battery Charging Of PHEV",* International Journal of Innovative Research in Computer and Communication Engineering, Vol. 2, Issue 11, November 2014, Pages 6953- 6959.

[7] Hun Sik Han, Yun Ho Kim, Seo Young Kim, Sukkee Um, Jae Min Hyun,"*Performance Measurement and Analysis of a Thermoelectric Power Generator",* Institute of Electrical and Electronics Engineers (IEEE), 2010, 978-1-4244-5343-6/10.

International Journal of Latest Research in Engineering and Technology (IJLRET)
ISSN: 2454-5031(Online)
www.ijlret.com‖ Volume 1 Issue 4‖September 2015 ‖ PP 10-15

On Analysis of Existence and Uniqueness of a Deterministic Model

[1]A. Abdullahi,[2]I.I.Raji* and [3]A.D.Adefolarin
[1,2,3]Department of Mathematics and Statistics
The Federal Polytechnic, Ado-Ekiti, Ekiti state, Nigeria.

Abstract. This paper presents adeterministic model for SEIVR epidemic model. The purpose is to examine the existence and uniqueness of our model. Picard *theorem is used toestablishthat there exists a solution and such solution is unique.*

1. Introduction

Malaria remains one of the most important human diseases throughout the tropical and subtropical regions of the world and causes more than 300million acute illness and at least one million deaths annually [14]. 90% of deaths due to malaria occur in young children. The search for a malaria vaccine is now over seventy years old [14]. Despite considerable efforts over the last three decades, and millions of dollars spent, there is still no registered vaccine against Plasmodium falciparum malaria. However, recent breakthroughs in malaria vaccines have given new hope that a safe, effective malaria vaccine may be found [16].

Mathematical models including vaccination aid in deciding on a vaccination strategy and in determining changes in qualitative behavior that could result from such a control measure [18]. In this paper, we formulated a mathematical model for a disease-modifying malaria vaccine that consider an individual who is susceptible and become exposed after coming in contact with an infected mosquito. The exposed class E reduces in population after the infection has manifested to join the infective class I, who later move to recovery class R.

1.1 The model Equations

2 The total population $N(t)$ is divided into four compartments with $N(t)=S(t)+E(t)+I(t)+V(t)+R(t)$, where S is the number of individuals in the susceptible class, E is the number of people who areexposed(the latent period, in which the person is infected but not yet infectious) but not vaccinated, I is the number of people who are infectious but not vaccinated, V is the number of individuals who are vaccinated and R is the immune class. This model is called an SEIVRS model. The differential equations for this model are:

$$\frac{dS}{dt}=\psi+\sigma R-\lambda S-dS \tag{1}$$

$$\frac{dE}{dt}=\lambda S-\alpha E-dE \tag{2}$$

$$\frac{dI}{dt}=\alpha E-\beta I-dI \tag{3}$$

$$\frac{dV}{dt}=\beta I-\varepsilon V--dV \tag{4}$$

$$\frac{dR}{dt}=\varepsilon V-\sigma R-dR \tag{5}$$

2. Basic Properties of the model

It can easily be shown that all the state variables of model remain non-negative for all non-negative initial conditions.
Consider the biological feasible region

$$\Sigma = \left\{ (S, E, I, V, R) \in \Re^5 : N \to \frac{\psi}{d} \right\}$$

2.1. Lemma1. The close Σ is positively invariant and attracting

Proof

Summing up (1) – (5), yield the rate of the total population

$$\frac{dN}{dt} = \psi - dN$$

Thus, the total hostpopulation (N) is bounded by $\frac{\psi}{d}$, so that $\frac{dN}{dt} = 0$ whenever

$N(t) = \frac{\psi}{d}$. It can easily been seen that

$N(t) = \frac{\psi}{d} + \left(N_0 - \frac{\psi}{d} \right) e^{-dt}$. In particular,

$N(t) = \frac{\psi}{d}$, if $N(0) = \frac{\psi}{d}$.

Hence, the region Σ is positively invariant and attracts all solutions in $\Re^5{}_+$.

3. Existence and Uniqueness of solution for the Model

For the mathematical model to predict the future of the system from its current state at time t_0, the initial value problem (IVP)

$$x^1 = f(t, x), \qquad x(t_0) = x_0 \tag{6}$$

Must have a solution that exist and also unique.

In this subsection, we shall establish conditions for the existence and uniqueness of solution for the model of equations. Let

$$\begin{aligned} f_1(t, x) &= \psi + \sigma r - \lambda s - ds \\ f_2(t, x) &= \lambda s - \alpha e - de \\ f_3(t, x) &= \alpha e - \beta i - di \\ f_4(t, x) &= \beta i - \varepsilon v - dv \\ f_5(t, x) &= \varepsilon v - \sigma r - dr \end{aligned} \tag{7}$$

So that

$$x^1 = f(t, x) = f(x) \tag{8}$$

3.1. Definition1. Suppose function $f(t,x)$ has domain D in (t,x)-space and suppose there exists a constant $k>0$ such that if $(t,x^1),(t,x^2)\in D$ then

$$\left| f(t,x^1) - f(t,x^2) \right| \le k\left|x^1 - x^2\right| \tag{9}$$

Then f satisfies a Lipchitz condition with respect to x in D, and k is a Lipchitz constant for f.

3.2. Theorem1. Let D be an open set in (t,x)-space. Let $(t_o,x^o)\in D$ and let a,b be positive constants such that the set

$$R = \left\{(t,x)\left|t-t_o\right| \le a, \left|x-x^o\right| \le b\right\} \tag{10}$$

is contained in D. Suppose function f is defined and continuous on D and satisfies a Lipchitz condition with respect to x in R. Let

$$Max = \max_{(t,x)\in R}\left| f(t,x)\right| \tag{11}$$

$$A = \min\left[a, \tfrac{b}{M}\right] \tag{12}$$

Then the differential equation

$$x^1 = f(t,x) \tag{13}$$

has a unique solution $x(t,t_o,x^o)$ on $(t_o - A, t_o + A)$ such that $x(t_o,t_o,x^o) = x^o$. This solution $x(t,t_o,x^o)$ is such that $\left|x(t,t_o,x^o)\right| - x\right| \le MA$ for all $t\in(t_o - A, t_o + A)$. (14)

3.3. Lemma1. If $f(,x)$ has a continuous partial derivative $\dfrac{\partial f_i}{\partial f_j}$ on a bounded closed convex domain R, then it satisfies a Lipchitz condition in R.

We are interested in the region

$$1 \le \varepsilon \le R\ . \tag{15}$$

We look for a bounded solution of the form

$$0 < R < \infty. \tag{16}$$

We shall prove the following existence theorem.

3.4. Theorem2. Let D denote the region defined in (9) such that (15) and (16) hold. Then there exists a solution of model (7) which is bounded in the region D.

Proof. Let

$$\begin{aligned} f_1 &= \psi + \sigma r - \lambda s - ds \\ f_2 &= \lambda s - \alpha e - de \\ f_3 &= \alpha e - \beta i - di \\ f_4 &= \beta i - \varepsilon v - dv \\ f_5 &= \varepsilon v - \sigma r - dr \end{aligned} \tag{17}$$

It suffices to show that

$\frac{\partial f_i}{\partial f_j}$, $i, j = 1,2,3,4,5$ are continuous.

$$\frac{\partial f_1}{\partial s} = \psi + \sigma r, \quad \left|\frac{\partial f_1}{\partial s}\right| = |\psi + \sigma r| < \infty, \quad \frac{\partial f_i}{\partial f_j}$$

$$\frac{\partial f_i}{\partial e} = 0, \qquad \left|\frac{\partial f_1}{\partial e}\right| = |0| < \infty,$$

$$\frac{\partial f_1}{\partial i} = 0, \qquad \left|\frac{\partial f_1}{\partial i}\right| = |0| < \infty,$$

$$\frac{\partial f_1}{\partial v} = 0, \qquad \left|\frac{\partial f_1}{\partial v}\right| = |0| < \infty,$$

$$\frac{\partial f_1}{\partial r} = 0, \qquad \left|\frac{\partial f_1}{\partial r}\right| = |0| < \infty,$$

Also,

$$\frac{\partial f_2}{\partial s} = \lambda, \qquad \left|\frac{\partial f_2}{\partial s}\right| = |\lambda| < \infty,$$

$$\frac{\partial f_2}{\partial e} = -\alpha - d, \quad \left|\frac{\partial f_2}{\partial e}\right| = |-\alpha - d| < \infty,$$

$$\frac{\partial f_2}{\partial i} = 0, \qquad \left|\frac{\partial f_2}{\partial i}\right| = |0| < \infty,$$

$$\frac{\partial f_2}{\partial v} = 0, \qquad \left|\frac{\partial f_2}{\partial v}\right| = |0| < \infty,$$

$$\frac{\partial f_2}{\partial r} = 0, \qquad \left|\frac{\partial f_2}{\partial r}\right| = |0| < \infty,$$

$$\frac{\partial f_3}{\partial s} = 0, \qquad \left|\frac{\partial f_3}{\partial s}\right| = |0| < \infty,$$

$$\frac{\partial f_3}{\partial e} = \alpha, \qquad \left|\frac{\partial f_3}{\partial e}\right| = |\alpha| < \infty,$$

$$\frac{\partial f_3}{\partial i} = -\beta - d, \qquad \left|\frac{\partial f_3}{\partial i}\right| = |-\beta - d| < \infty,$$

$$\frac{\partial f_3}{\partial v} = 0, \qquad \left|\frac{\partial f_3}{\partial v}\right| = |0| < \infty,$$

$$\frac{\partial f_3}{\partial r} = 0, \qquad \left|\frac{\partial f_3}{\partial r}\right| = |0| < \infty$$

$$\frac{\partial f_{4i}}{\partial s} = 0, \qquad \left|\frac{\partial f_4}{\partial s}\right| = |0| < \infty,$$

$$\frac{\partial f_4}{\partial e} = 0, \qquad \left|\frac{\partial f_4}{\partial e}\right| = |0| < \infty,$$

$$\frac{\partial f_4}{\partial i} = \beta, \qquad \left|\frac{\partial f_4}{\partial i}\right| = |\beta| < \infty,$$

$$\frac{\partial f_4}{\partial v} = -\varepsilon - d, \qquad \left|\frac{\partial f_4}{\partial v}\right| = |-\varepsilon - d| < \infty,$$

$$\frac{\partial f_{4i}}{\partial r} = 0, \qquad \left|\frac{\partial f}{\partial r}\right| = |0| < \infty.$$

$$\frac{\partial f_5}{\partial s} = 0, \qquad \left|\frac{\partial f_5}{\partial s}\right| = |0| < \infty,$$

$$\frac{\partial f_5}{\partial e} = 0, \qquad \left|\frac{\partial f_5}{\partial e}\right| = |0| < \infty,$$

$$\frac{\partial f_5}{\partial i} = 0, \qquad \left|\frac{\partial f_5}{\partial i}\right| = |0| < \infty,$$

$$\frac{\partial f_5}{\partial v} = \varepsilon, \qquad \left|\frac{\partial f_5}{\partial v}\right| = |\varepsilon| < \infty,$$

$$\frac{\partial f_5}{\partial r} = -\sigma - d, \qquad \left|\frac{\partial f_5}{\partial r}\right| = |-\sigma - d| < \infty.$$

4.Conclusion

Since all these partial derivatives are continuous and bounded, therefore, by theorem (2), there exists a unique solution of (7) in the region D

References

[1]. H.W. Hethcote, The mathematics of infectious diseases, Society for Industrial and Applied Mathematics SIAM Review, 42, No. 4 (2000), 599-653.

[2]. J.Tumwiine, J.Y.T. Mugisha, L.S. Luboobi, A host-vector model for malaria with infective immigrants, Journal of Mathematical Analysis and Applications: 361 (2010) 139-149.

[3]. J.Tumwiine, J.Y.T. Mugisha, L.S. Luboobi, A mathematical model for the dynamics of malaria in a human host and mosquito vector with temporary immunity, Applied Mathematics and Computation 189 (2007) 1953 – 1965

[4]. P. Johansson, J. Leander, Mathematical Modeling of Malaria, Chalmers University of Technology Gothenburg, 2010.

[5]. N. Chitnis, J.M. Cushing and J.M. Hyman, Bifurcation Analysis of a Mathematical Model for Malaria Transmission. SIAM J.APPL.MATH.Vol. 67, No. 1, pp. 24 – 45.

[6]. J. Cronin, Differential Equations: Introduction and Qualitative Theory, Marcel Dekker, Inc. (1994).

[7]. L. Bubniakova,. The Mathematics of Infectious Diseases, M.sc thesis (2007).

[8]. J.K. Hale, Ordinary Differential Equations, John Wiley, New York, 1969.

[9]. G. Li, W. Wang, Z. Jin, Global stability of an SEIR epidemic model with constant immigration, Chaos Solutions Fractals 30 (4) (2006) 1012 – 1019

[10]. G. A. Ngwa, W. S. Shu, A mathematical model for endemic malaria with variable human and mosquito populations, Mathematics and Computer Modelling 32 (2000) 747 – 763.

[11]. World Health Organization, World malaria report 2005. Geneva. World Health Organization. WHO/HAM/MAL/2005.1102, 2005.

[12]. World Health Organization. Malaria – A global crisis, Geneva, 2000.

[13]. C.C. Carlos, W, Carlos, C. Garsow and Y, Abdul-Aziz. Mathematical models of Isolation and Quarantine, American Medical Association 290(2003) 21.

[14]. J.S. Robert. Could low-efficacy malaria vaccines increase secondary infections in endemic areas?

[15]. D.Lacitignola, B.Buonomo. On the backward bifurcation of a vaccination model with nonlinear incidence. Nonlinear Analysis: Modelling and Control, 16:1(2011):30-46.

[16]. S.Thomas, K. F.Gerry, M.Nicolas, R. Amanda, L.Molineaux, T. Fabrizio, H, Guy, U, Jurg, K, Dietz and M. Tanner. Mathematical modeling of the impact of malaria vaccines on the clinical epidemiology and natural history of Plasmodium Falciparum malaria: Overview. A.m.Trop.Med. Hyg. 75(2), 2006, pp. 1-10.

[17]. M.De la Sen, S. Alonso-Quesada and A. Ibeas. Observer-Based Vaccination for a SEIR Epidemic Model with Time-Varying Total Population.International Conference on Circuits, System and Simulation, IPCSIT, 7(2011).

[18]. J.Arino, C. Connell, MCCLUSKEY, and P.V.D. Driessche. Global result for an epidemic model with vaccination that exhibits backward bifurcation. SIAM J. APPL. MATH, 64:1 :(2003), 260-276.

International Journal of Latest Research in Engineering and Technology (IJLRET)
ISSN: 2454-5031(Online)
www.ijlret.com‖ Volume 1 Issue 4‖September 2015 ‖ PP 16-23

A COMPARATIVE STUDY ON THE EFFECT OF ENVIRONMENTAL FACTOR (E-FACTOR) MODEL ON ANAMMCO AND NIGERGAS ENUGU, NIGERIA

Aniagolu Celestine Obinna (PhD)
Department of Estate Management, Enugu State University of Science and Technology (ESUT) Enugu, Nigeria.

Abstract: *Environmental pollution is one phenomenon that is generally associated with industries in Nigeria. Estate Surveyors and Valuers whose responsibility it is to value all categories of properties in Nigeria have been charged with development of models that would take into consideration environmental pollution tendencies of industries and other facilities generation waste in Nigeria. The E-factor model was developed. The model adopts both the experimentation and survey research method. This study tries to carry out a comparative study on the effect of E-factor on ANAMMCO, a factory with international repute, and NIGERGAS, an indigenous factory. The result shows that while ANAMMCO lost ₦55,337,436 representing 2.09% of the original value NIGERGAS lost ₦16,266,020 representing 14.54% of its original value. This off course shows that ANAMMCO is better equipped than NIGERGAS in terms of environmentally friendly practices. The study therefore recommends that local industries in Nigeria should be properly supervised and that the E-factor model should be used extensively by valuers in practice in Nigeria if they will continue to play the role of environmental protection advocates.*

Keywords: *Environment, Pollution, Environmental Factor, Valuation, Model, Environmental Pollution, ANAMMCO, NIGERGAS*

1.0 Background of the Study:

The twin issues of Environmental management and sustainable development have been the focus of the world for past two or three decades. According to Lead (1997) proponents of these issues have called for a Systems Approach, since no profession, no matter how well trained can claim an exclusive expertise in them. Supporting this view, Ogunba (1999) called for a multi-disciplinary approach in which all professionals should contributed their quota towards making the world a better place.

In Nigeria, the Estate Surveyor and Valuer is the professional whose responsibility it is to interpret the value of all categories of properties for various purposes. In carry out his valuation duties, he depends very much on models developed many decades ago by scholars in Europe and other parts of the world. These models may include the investment method, cost approach, market approach as the primary methods and the residual method and profit basis method as the secondary or hybrid methods. These models according to Aniagolu (2009) have implicit environmental considerations in the form of neighbourhood analysis.

In the face of the world's current focus on environment, these models are considered inadequate for valuation of industries and other facilities generating waste in Nigeria. Advocates of environmental protection in Nigeria then called for models that can consider environmental damages caused by industries and other facilities generating waste and reflect such damages in the final value of industries or facilities. In response to this call Aniagolu (2009) developed the Environmental factor adjusted cost approach to valuation. Aniagolu, Iloeje and Emoh (2015) demonstrated the workability of the model which includes data collection and analysis procedure. Aniagolu, Iloeje and Okwu-Delunzu (2015) applied the model to the valuation of Anambra Motor Manufacturing Company (ANAMMCO) while Aniagolu, Iyi and Ugwu (2015) valued NIGERGAS Company Limited Enugu, Nigeria using the same model.

Against this background, this study focuses on comparing the effect of the model on the two companies.

2.0 Statement of Problem

Anambra Motor Manufacturing Company of Nigeria (ANAMMCO) is a company with international repute. Ownership of the company cuts across international boundaries. Its products are marketed internationally and its staff includes expatriates. By all standards the company has an international reputation. Conversely, NIGERGAS Company of Nigeria is a local company. It is fully owned by Nigerians, its product circulates within the country and there are no expatriates in its staff list. Previous study by Aniagolu, Iloeje and Okwu-Delunzu (2015) had valued ANAMMCO using both the conventional model (Cost Approach to Valuation) and the new model (The Environmental Factor Adjusted Cost Approach to Valuation). Similarly, Aniagolu, Iyi and Ugwu (2015) equally valued NIGERGAS Company of Nigeria using both the conventional model and the E-

factor models. This study therefore tries to compare the effect of the new model (E-factor models) on the two companies bearing in mind that one (ANAMMCO) has an international background while the other (NIGERGAS) has a local background.

3.0 Aim and Objectives of the Study

The aim of this study is to compare the effect of the E-factor model on both ANAMMCO and NIGERGAS. In order to achieve this aim the study will first summarize the valuation of ANAMMCO and NIGERGAS using both the conventional method and the E-factor model. Second, the study would compare results from the two valuations so that inferences can be drawn.

4.0 Methodology

This study adopts the descriptive research methodology drawing its analogy from previous works by Aniagolu, Iyi and Ugwu (2015) and Aniagolu, Iloeje and Okwu-Delunzu (2015). However majority of the data used in these previous studies were generated using the survey and experimentation research methodology.

5.0 ANAMMCO and NIGERGAS Compared

5.1 ANAMMCO

Aniagolu, Iloeje and Okwu-Delunzu (2015) quoting Aniagolu (2009) and MB ANAMMCO (1994) described in details the important features of ANAMMCO. This section will also try to summarize these features.

ANAMMCO as at 2009 when the field work for this study was done is 40% owned by Daimler BenzAG/Mercedes-Benz AG of Germany and 60% owned by different categories of Nigerians at both corporate, state and federal levels. The company leads in the motor assembly market in Nigeria and has attained of 65% local content. The products of the company include trucks of different types and sizes, buses of different capacities (especially commercial buses), fire fighting vehicles, Ambulances, Mobile Clinics and Refuse Disposal Vehicles. The company is also into refurbishment of old cars. These products are marketed both locally and internationally through some acclaimed dealers, distributors and agents.

ANAMMCO as at 1994 has a staff strength of 794 workers which includes about 12 expatriates. The company has a viable staff welfare scheme which covers a medical clinic, staff canteen, staff club (recreational facilities) and a football team. The management of the company is organized at three important levels viz, the Board of Trustees, the Management Committee members and the heads of department.

The company operates two major parallel lines of production namely the body shop and the chassis section. Details of these, as mentioned before have been presented by Aniagolu, Iloeje and Okwu-Delunzu (2015). The company operates a viable waste management system and has an Effluent Treatment Plant (ETP) which comprises an oxidation tank, a biological tank and an equalizing tank all of which are of international standard. Industrial kits such as boots, helmets, overalls, gloves and goggles are provided for members of staff and are strictly enforced. ANAMMCO has a fire station and fire extinguishers and fire alarms are strategically located in the company.

5.2 NIGERGAS

Conversely, Aniagolu, Iyi and Ugwu (2015) quoting NIGERGAS (1980) and Aniagolu (2009) equally described in details the important features of NIGERGAS Company Emene, Enugu, Nigeria. A summary of these features would be attempted in this section.

As at 2009 when the field work for this study was done NIGERGAS company of Nigeria is 100% owned by Enugu State Government. Although the company started as a partnership business between the former Eastern Nigerian Government and Siad Machine Impianti of Italy in 1962, the 1967 Biafran Civil war saw the withdrawal of the foreign partners. NIGERGAS as the name implies specializes in the production of gases such as welding or processing oxygen, medical oxygen, nitrogen, and Acetylene gases. Apart from calcium carbide which was imported from Europe all the other raw materials are locally sourced.

Management of NIGERGAS is at two levels namely the General Manager/Chief Executive Officers and the various Heads of department. The products of the company are marketed locally through distributors and agents. The staff strength of the company as at 2009 is less than 100. When compared to ANAMMCO, the company has no expatriates, no staff welfare scheme such as medical clinic, staff canteen, staff club (recreational facilities) and football club. The company also operates two major lines of production namely the Oxygen plant and the Acetylene plant. Details of this have been discussed by Aniagolu, Iyi and Ugwu (2015). The solid waste management system of the company is not well defined and the effluent recycling plant is not functional at the time of the study. However an improvised system consisting of four septic/sedimentation tanks were in use. Also industrial kits such as boots, helmets, overalls, gloves and goggles were not in use and are therefore not enforced. NIGERGAS has no fire station. Rather, sand buckets and fire extinguishers were in use.

Majority of the fire extinguishers are either not functional or outdated. Fire alarms are completely not in existence.

When the two companies are compared using the discussion in section 5.0, it can be concluded that ANAMMCO is a company with international reputation while NIGERGAS is a local company.

6.0 Valuation of ANAMMCO and NIGERGAS Using the Conventional Method

The conventional valuation method adapted for the valuation is the Cost Approach to Valuation. According to Egolum (1993) the method is founded on the principles of substitution and contribution. Kalu (2002) went further to state that the method is best used in situations where the market approach is unsuitable and the investment method is inapplicable. Dean, Gray and Steel (1986) then stated the types of properties where this method of valuation can be applied as follows; special purpose industrial properties, service properties such as schools, hospitals, churches etc (where comparable sales evidence is not available), any other types of properties where there is no rent passing and there are no comparable sales evidence.

Aniagolu (2009) presented the Cost Approach to Valuation mathematically as follows:

$$CV = V_L + [(V_{BI} + V_{PME} + V_{FF} + V_{MV}) - D]$$

Where:

CV = Capital Value
V_L = Value of Land
V_{BI} = Replacement Cost (New) of Buildings and other Improvements
V_{PME} = Replacement Cost (New) of Plant, Machinery and Equipment
V_{FF} = Replacement Cost (New) of Furniture and Fittings
V_{MV} = Replacement Cost (New) of Motor Vehicles
D = Accrued Depreciation

6.1 Valuation of ANAMMCO Using the Conventional Method

Aniagolu, Iloeje and Okwu-Delunzu (2015) quoting Aniagolu (2009) and Okolo Okolo and Company (1995) presented a summary of the valuation of assets of ANAMMCO as at 11th day of August 1995 after deductions have been done for depreciation as shown in table 1

Table 1: Summary of Valuation of Assets of ANAMMCO

S/N	Description of Assets	DRC of Assets
1	Land	₦90,396,000
2	Building & Improvements	₦2,171,571,200
3	Motor Vehicles	₦92,468,000
4	Plant Machinery & Equipment	₦214,962,200
5	Furniture & Fittings	₦70,362,300
	Total	₦2,639,759,700

Source: Okolo, Okolo and Company (1995)

6.2 Valuation of NIGERGAS Using the Conventional Method

Similarly, Aniagolu, Iyi and Ugwu (2015) quoting Frank Maluze and Associates (2001) equally presented a summary of the valuation of Assets of NIGERGAS as at 12th September 2001, after deductions have been made for depreciation as shown in table 2.

Table 2: Summary of Valuation of Assets of NIGERGAS, Emene, Enugu.

S/N	Description of Assets	DRC of Assets
1	Land	₦10,608,000
2	Building & Improvements	₦44,106,000
3	Motor Vehicles	₦10,020,000
4	Plant Machinery & Equipment	₦39,595,000
5	Furniture & Fittings	₦7,517,000
	Total	₦111,846,000

Source: Frank Maluze and Associates (2001).

From the above valuations it could be seen that while the assets of ANAMMCO command a value of ₦2,639,759,700 (Two Billion, Six Hundred and Thirty-Nine Million, Seven Hundred and Fifty-Nine Thousand Seven Hundred Naira), that of NIGERGAS command a value of ₦111,846,000 (One Hundred and Eleven Million, Eight Hundred and Forty-Six Thousand Naira). It could be seen from the above that the assets of

NIGERGAS represent only about 4.24% of the Assets of ANAMMCO. This goes further to confirm the fact that ANAMMCO has assets of international reputation while NIGERGAS is only a local company.

7.0 Shortcomings of the Valuation of ANAMMCO and NIGERGAS Using the Conventional Method

Aniagolu (2009) discussed the shortcomings of the two valuations done with the conventional valuation method as follows:

7.1 Air Pollution

According to World Bank (1978), "air pollution is the presence in the outdoor atmosphere of one or more contaminants such as dust, fumes, gas, mist, odour, smoke or vapour in quantities, characteristics and duration as to make them actually or potentially injurious to human, plant or animal life or property or which unreasonably interfere with the comfortable enjoyment of life and property". Hence, the model did not consider the ability of the industry to produce air pollution agents.

7.2 Water Pollution

Again the model did not take into consideration the water pollution tendencies of these industries. Since effluent discharge from the industrial processes if not properly treated would definitely pollute nearby water bodies. Hence the model did not also consider such water pollution parameters as colour, odour, pH conductivity, total solids, dissolved solids, suspended solids, acidity, alkalinity, calcium, magnesium, total hardness sodium, potassium, copper, zinc, iron, manganese, lead, chloride, sulphate, nitrate, dissolved oxygen, BOD, COD, E-Coli, Coliform, oil/grease, total plate count, etc.

7.3 Soil Pollution / Solid Waste Management

Also the model made no provision for assessment of level of solid waste management in the industries. Solid waste management involves solid waste generation, collection, disposal and resource recovery. Hence, the model did not consider the possibility of soil contamination from solid waste from industrial process. The soil analysis should have been in the form of Soil Element analysis to determine the level of calcium (Ca), Magnesium (Mg), Sodium (Na_2), Iron (Fe), Aluminium (Al), Lead (Pb), Zinc (Zn), Copper (Cu), Manganese (Mn), Silica (Si), Loss on Ignition (LOI), Titanium (Ti) and Cadmium (Cd).

7.4 Noise Pollution

Noise has been defined by Auton (1979) as "an unwelcome sound". Noise pollution can come from automobiles, human activities, industrial and commercial activities, railways, tramp-ways, building/construction activities, etc. The existing valuation model does not take into consideration the noise pollution tendencies of industrial processes.

7.5 Industrial Health and Safety

Furthermore, Industrial Health and Safety is of utmost importance to modern day industries. Industrial accidents are usually fatal and attract serious criticism especially where safety measure were not taken seriously. The existing models does not consider the issue of industrial safety and the ability of the industry to provide Health and Safety facilities/ gadgets by way of clinics, helmets, boots, overalls, hand gloves, respirators, ear plugs, nose masks, fire alarm systems, fire fighting system, etc.

8.0 Valuation of ANAMMCO and NIGERGAS Using the Environmental Factor (E-Factor) Adjusted Cost Approach to Valuation

The E-factor model was well explained by Aniagolu, Iloeje and Emoh (2015). The data collection procedure and the data analysis method were clearly discussed. The model as propounded by Aniagolu (2009) is a follows:

$$CV = V_L + V_{BI} + V_{FF} + [(V_{PME} + V_{MV}).\ \text{E-factor}]$$

Where:
CV = Capital Value of Industry
V_L = Value of Land
V_{BI} = Depreciated Replacement Cost of Buildings and Improvements
V_{FF} = Depreciated Replacement Cost of Furniture and Fittings
V_{PME} = Depreciated Replacement Cost of Plant, Machinery and Equipment
V_{MV} = Depreciated Replacement Cost of Motor Vehicles
E-Factor = Rate of Compliance of the Industry to Environmental Standards

Aniagolu, Iloeje and Okwu-Delunzu (2015) applied the E-factor model to the valuation of ANAMMCO. Similarly, Aniagolu, Iyi and Ugwu (2015) valued NIGERGAS using the E-factor model. A summary of the result from the E-factor analysis is presented in table 3.

Table 3: Summary of Result from E-factor Analysis from ANAMMCO and NIGERGAS

S/No.	Parameters	ANAMMCO		NIGERGAS	
		Compliance Rate %	Non Compliance Rate %	Compliance Rate %	Non Compliance Rate %
1	Air Quality	16.67	3.33	16.67	3.33
2	Effluent Discharge	12.65	7.35	9.45	10.55
3	Solid Waste Management	8.50	1.50	4.50	5.50
4	Soil Quality	8.75	1.25	10.00	0.00
5	Noise	16.67	3.33	20.00	0.00
6	Industrial Health and Safety	18.80	1.20	5.60	14.40
	Total	82.04	17.96	66.22	33.78

Source: Aniagolu (2009)

From table 3 it could be seen that the E-factor analysis for the two companies / factories were done under six parameters namely, Air Quality, Effluent Discharge, Solid Waste Management System, Soil Quality, Noise Pollution, and Industrial Health and Safety.

For Air Quality out of the 20 points allocated to air quality ANAMMCO has a rate compliance of about 16.67 points while the rate of non-compliance is 3.33 points. Comparatively, NIGERGAS has a rate of compliance of the same 16.67 points and a rate of non-compliance of 3.33 point. This shows that the air quality of ANAMMCO and NIGERGAS are exactly the same.

Again, the model assigned 20 marks to effluent discharge quality. From the analysis carried out under E-factor, ANAMMCO made 12.65 points as its rate of compliance while 7.35 points is the rate of non-compliance. Conversely, NIGERGAS rate of compliance stands at 9.45 points while the rate of non-compliance is 10.55%. This shows that ANAMMCO Effluent Treatment Plant (ETP) is working effectively giving the company superior points over NIGERGAS company. Hence the rate compliance of ANAMMCO is far higher than that of NIGERGAS.

It terms of solid waste management system, ANAMMCO made 8.50 points out of the 10 marks assigned by the model, while it recorded a rate of non compliance of 1.5 points. This shows thatANAMMCO has a very active and self-sustaining solid waste management system. When compared with NIGERGAS, a rate of compliance of 4.5 points was recorded while a rate of non-compliance of 5.50 points was recorded. This equally shows that the solid waste management system of NIGERGAS leaves much to be improved upon. Closely related to solid waste management is the soil quality analysis which the model assigned another 10 marks. After the soil quality analysis, ANAMMCO secured a rate of compliance of 8.75 points and lost a rate of non-compliance of 1.25 points. This attests to the fact that ANAMMCO's soil quality is commendable although there is room for improvement. In comparison with NIGERGAS, the rate of compliance to acceptable soil quality is 10.0 full points while the company lost no mark at all. This shows that NIGERGAS's soil quality is in a very good shape. Hence the company only needs to conserve the existing soil quality to avoid contamination.

Noise level was also considered by the model and about 20 marks was assigned to it. At the end of our analysis, ANAMMCO pulled a rate of compliance of 16.67 points and a rate of non-compliance of 3.33 points. The company lost marks because the noise level at the power generating set area was higher than normal. Surprisingly, NIGERGAS scored full 20 marks under noise quality. This can equally be attributed to the fact that the level of activities in the company has quite diminished at the time of the field work and the power generating set which would have increased the noise level is not working.

Finally, for Industrial Health and Safety, the model also assigned 20 marks. ANAMMCO made a total rate of compliance of 18.80 points and a rate of non compliance of 1.20 points. Hence, ANAMMCO attaches very high importance to industrial health and safety. In contrast, NIGERGAS pulled a rate of compliance of 5.60 points and a rate of non-compliance of 14.40 points. This result is a very good evidence that NIGERGAS still has a lot to improve upon in terms of industrial health and safety. From the above it could be seen that ANAMMCO has a total rate of compliance of 82.04 points and a total rate of non-compliance of 17.96 points while NIGERGAS has a total rate of compliance of 66.22 points and a total rate of non-compliance of 33.78 points.

8.1.0 Revaluation of ANAMMCO and NIGERGAS Using the E-Factor Model

As stated earlier Aniagolu, Iloeje and Okwu-Delunzu (2015) applied the E-factor model to the valuation of ANAMMCO while Aniagolu, Iyi and Ugwu (2015) valued NIGERGAS using the E-factor model too. The summary of the two valuations is presented in the sections below.

8.1.1 ANAMMCO

The summary of the valuation is as shown below:

$CV = V_L + V_{BI} + V_{FF} + [(V_{PME} + V_{MV}).\ \text{E-factor}]$

Where:

CV = Capital Value of Industry
V_L = Value of Land
V_{BI} = Depreciated Replacement Cost of Buildings and Improvements
V_{FF} = Depreciated Replacement Cost of Furniture and Fittings
V_{PME} = Depreciated Replacement Cost of Plant, Machinery and Equipment
V_{MV} = Depreciated Replacement Cost of Motor Vehicles
E-Factor = Rate of Compliance of the Industry to Environmental Standards

Hence, valuation of assets of MB-ANAMMCO, Enugu, Nigeria using the E-factor model is as follows:

CV = ₦90,396,000 + ₦2,171,571,200 + ₦70,362,300 + [(₦214,962,200 + ₦92,468,000) x 0.82]
= ₦90,396,000 + ₦2,171,571,200 + ₦70,362,300 + [₦307,430,200 x 0.82]
= ₦90,396,000 + ₦2,171,571,200 + ₦70,362,300 + ₦252,092,764
= ₦2,584,422,264

This shows a loss of value of ₦ 55,337,436.

8.1.2 NIGERGAS

Similarly, the summary of the valuation of NIGERGAS using the E-factor model is as follows:

$CV = V_L + V_{BI} + V_{FF} + [(V_{PME} + V_{MV}).\ \text{E-factor}]$

Where:

CV = Capital Value of Industry
V_L = Value of Land
V_{BI} = Depreciated Replacement Cost of Buildings and Improvements
V_{FF} = Depreciated Replacement Cost of Furniture and Fittings
V_{PME} = Depreciated Replacement Cost of Plant, Machinery and Equipment
V_{MV} = Depreciated Replacement Cost of Motor Vehicles
E-Factor = Rate of Compliance of the Industry to Environmental Standards

Therefore, valuation of NIGERGAS using the E-factor model is as follows:

CV = ₦54,714,000 + ₦7,517,000 + [(₦39,595,000 + ₦10,020,000) x 0.662]
= ₦54,714,000 + ₦7,517,000 + [₦49,615,000 x 0.662]
= ₦54,714,000 + ₦7,517,000 + ₦32,845,130
= ₦95,579,980

This shows a reduction in value of about ₦16,266,020 (Sixteen Million, Two Hundred and Sixty Six Thousand and Twenty Naira) and 14.54% loss of value.

9.0 Summary of Valuation of ANAMMCO and NIGERGAS Using both Methods

The summary of the valuations for ANAMMCO and NIGERGAS using the conventional Cost Approach to Valuation and the E-factor model is as presented in table 4.

Table 4: Summary of the Valuations for ANAMMCO and NIGERGAS

S/N	Parameters	ANAMMCO	NIGERGAS
		₦	₦
	Valuation Method		
1.	DRC Model	2,639,759,700	111,846,000
2.	E-factor Model	2,584,422,264	95,579,980
3.	Decrease in Value	55,337,436	16,266,020
3.	Rate of Decrease	2.09%	14.54%

Source: Aniagolu (2009)

Table 4 shows that the difference in value arising from the application of two models in ANAMMCO is ₦55,337,436 (Fifty Five Million, Three Hundred and Thirty Seven Thousand, Four Hundred and Thirty Six Naira). This represents a loss of value of 2.09% arising from the application of the new models. Hence, ANAMMCO lost ₦55,337,436 in the value of its assets because it is 17.96 points away from attaining international best practices in environmental protection. For NIGERGAS, it could also be seen that a loss of value of ₦16,266,020 (Seventeen Million, Two Hundred and Sixty Six Thousand and Twenty Naira). This represents a loss of value of 14.54%. So NIGERGAS lost ₦16,266,020 in the value of its assets because it is 33.78 points away from international best practices.

10.0 Discussion of Findings

ANAMMCO and NIGERGAS companies have been valued using both the conventional cost approach to valuation and the environmental factor adjusted cost approach (E-factor model) to valuation. The results show that ANAMMCO is 82.04% compliant to environmental standards and 17.96% non-compliant. Similarly, NIGERGAS is 66.22% compliant to environmental standards while the company is 33.78% non-compliant.

When interpreted in terms of value, ANAMMCO on one hand recorded a ₦55,337,436 loss of value when the valuation figures for the conventional cost approach was compared with of the E-factor model. This represents a loss of value of 2.09%. On the other hand, NIGERGAS recorded a loss of value of ₦16,266,020 when the valuation figures from the two models were compared. This equally represents a 14.54% loss in value.

When the results are placed side by side, it could be seen that ANAMMCO is more environmentally friendly than NIGERGAS. Also ANAMMCO has more valuable assets when compared to that of NIGERGAS since assets of NIGERGAS represent only about 4.24% of that ANAMMCO. Hence, in size ANAMMCO is a bigger company than NIGERGAS.

Further, ANAMMCO is only about 17.96% away from attaining international best practices on Environmental Standard while NIGERGAS is about 33.78% away from same. This shows that NIGERGAS still has a lot of work to do in terms of installation of pollution of abatement equipments in the company. This is very necessary in terms of Air and Water pollutions and solid waste management system. The noise and soil quality levels need to be conserved properly since they are so far excellent.

Finally, in terms of industrial health and safety, NIGERGAS is still very far behind when compared to ANAMMCO. Safety precautions in terms of hand gloves, helmets, boots, overalls, ear plugs, nose masks, fire alarms, respirators, firefighting equipments, clinics etc need to be embraced by management of the company and a safety manager be employed for enforcement.

12.0 Conclusion

In conclusion, the Estate Surveyor and Valuer should continue playing her role as an environmental protection advocate in Nigeria. The E-factor model should be adopted in the valuation of industries and other facilities generating waste in Nigeria. This will help reduce the general over-valuation of properties that are not environmentally sound in Nigeria.

REFERENCES

[1] Lead International Inc. (1997); Costa Rica Case Study and Sustainable Development. LEAD International Inc. New York.

[2] Ogunba, A. O. (1999); Environmental Resource Valuation: New Challenges for Estate Surveyors and Valuers in 21st Century. A Paper Presented During 1999 NIESV National Conference in Calabar.

[3] Aniagolu, C.O. (2009); A Model for Integrating Environmental Considerations into the Valuation of ANAMMCO and NIGERGAS in Emene Industrial Layout, Enugu Nigeria. An Unpublished Doctorial Research Thesis, ESUT, Enugu.

[4] Aniagolu, C.O, Iloeje, A. F and Emoh, F. I.(2015); A Model for Integrating Environmental Considerations into the Valuation of Industries in Enugu Urban Area, Nigeria. International Journal of Engineering Research and Application Vol.5, Issue 6 (Part-3) June, 2015.

[5] Aniagolu, C.O, Iloeje, A. F and Okwu-Delunzu, V. (2015); Application of Environmental Factor Model to the Valuation of Anambra Motor Manufacturing Company (ANAMMCO) Enugu, Urban Area, Nigeria. International Journal of Engineering Research and Application Vol.2, Issue 8 August, 2015.

[6] Aniagolu, C.O, Iyi, E. A and Ugwu, L. N.(2015); Valuation of NIGERGAS Company, Emene, Enugu, Nigeria using the Environmental Factor (E-Factor) Model. International Journal of Latest Research and Technology Vol.1, Issue 3 August, 2015.

[7] NIGERGAS (1980); Key Facts about NIGERGAS Company Limited. Industrial and Medical Gas Producers" Information Leaflet, Enugu, Nigeria.

[8] Egolum, C. C. (1993); "Real Estate Valuation Theories and Practice in Nigeria" The Estate Surveyor and Valuer, Vol.17 No.1 Pp.31 – 38.

[9] Kalu, I.U. (2002); *Valuation:* An Economic Contribution to Environmental Degradation Remediation. *The Estate Surveyor and Valuer,* Vol.25, No.1, pp26-31.

[10] Deane, T.M., Gray, R.N. and Steel, H.W. (1986); *Real Estate Valuation.* Progress, Publishing House, Enugu, Nigeria.

[11] Frank Maluze & Associate (2001); Report on Valuation of Assets of NIGERGAS Limited, Emene, Enugu Nigeria. December 2001

[12] Okolo, Okolo and Company (1995); Mercedes-Benz ANAMMCO Emene, Enugu Asset Valuation Report. September, 1995.

[13] World Bank Report (1978); "Water Supply and Waste Disposal" Poverty and Basic Needs Series, September,1978.

[14] Aution, J. T. (1979); "Occupational Safety and Health Management" MacGraw-Hall Book Co. London.

[15] MB ANAMMCO (1994); Mercedes-Benz ANAMMCO at a Glance. Information Leaflet, Enugu, Nigeria.

International Journal of Latest Research in Engineering and Technology (IJLRET)
ISSN: 2454-5031(Online)
www.ijlret.com‖ Volume 1 Issue 4‖September 2015 ‖ PP 24-31

Assessment of Nigeria's Power Situation and the Way Forward

Israel Agwu Etu[1], Enesi Abdulrahaman Ahmed[2] and Kufre Esenowo Jack[3]
Department of Electrical/Electronic Engineering Technology, Akanu Ibiam Federal Polytechnic Unwana, PMB 1007 Afikpo, Ebonyi State, Nigeria

Abstract: One of the biggest threats to development in Nigeria is inadequate and erratic power supply. Any nation wishing to develop must increase its generated power in proportion to its population growth. For the so-called vision 20: 2020 to be attainable, Nigeria needs to register a take-off power generation status of 10,000 Mega Watts (that is, 10,000MW). Unfortunately, Nigeria's present power generation situation is a far cry from this, considering that it is not generating up to 4,000MW yet, with only about 40 percent of the entire population having access to public power supply. This paper takes a look at the factors militating against the realization of adequate and steady power supply in the country, the abysmal efforts being made from time to time by the relevant quarters to cub this menace and the degree of adversity faced by citizens as a result of the problem. It suggests possible ways out of the doldrums; and it is the wish of the paper that the sooner the recommendations are expeditiously implemented, the sooner Nigeria would be on the path leading to industrial development because no nations develops industrially without adequate and constant power supply.
Keywords: Nigeria, Power, Power Sector, PHCN

Introduction

Unstable electric power supply is no longer a new experience to Nigerians. It is now a customary thing. Nigerians have become so used to it that if there is continuous power supply for a consecutive number of hours, people would become afraid that by the time the power goes off, it may take days, weeks or even months to restore it.

The power problem of Nigeria is a hydra-headed one, manifesting itself in two main ways viz,

- Insufficient power
- Incessant power outage

Okoronkwo and Nwangwu (2006) described the power situation of this country as rather disappointing, considering the huge investments in the power sector by the Federal Government. They added that the consequence is decrease in economic activities and social comfort.

The remote cause of insufficient power generation is corruption in high places while incessant power outage is basically caused by system failure as a result of the following reasons adduced by Anyaehie (2011):

- Scarcity of relevant manpower for adequate maintenance and general consumer indiscipline
- Lack of essential spare parts for maintenance
- Absence of local manufacturing capabilities
- Lack of systematic studies of distribution networks to reduce extra-ordinarily high losses that accompany haphazard system expansion

Furthermore, Okoronkwo and Nwangwu (2006) also adduced the following reasons:

- Aged equipment
- Lack of quick response by fault clearing crew
- Overloading of equipment
- Strong and high wind acting on long lines
- Lack of ring main distribution system, hence no redundancy due to the use of only radial lines
- Activities of vandals

Both low power and unstable power are unhealthy for national growth and so need to be overcome. There is no gainsaying the fact that electric power is the vehicle on which every other sector of the nation rides to get to their destination (Anyaehie, 2011). It is no longer how much money a country controls, but how much electrical power it provides its citizens.

This paper advocates a sincere political will, on the part of our leaders, to combat the perennial power problem of this country, believing that it will serve as a sure springboard to her development.

History of power Generation in Nigeria

According to Obadote (2009) the generation of electricity in Nigeria began more than a century ago; precisely in 1896 when it was first generated in Lagos, which is fifteen years after its introduction in England.

In order to increase its production, various bodies at various times have been set up to manage and/or regulate the activities of power generation.

In 1950, Electricity Corporation of Nigeria (ECN) was established by an Act of Parliament to serve as a central body in charge of electricity supply and development. There were some other bodies like Native Authorities and Nigeria Electricity Supply Company (NESCO) which were only licensed to produce electricity in certain parts of the country (Okoro and Chikuni, 2007).

In 1962, by an Act of Parliament, another body known as Niger Dam Authority (NDA) was established. The Authority had the responsibility to generate electricity using the water resource of River Niger and any other River by construction and maintenance of dams (Sambo, 2008). Also included in the Authority's responsibilities was to promote navigation and fish brine and irrigation. Electricity Corporation of Nigeria bought electricity produced by Niger Dam Authority for distribution and sales at utility voltage. For the effective use of available resource for supply of electricity in the country and also to put the production and distribution of electricity in one body ECN and NDA were merged in April 1972 and known as National Electric Power Authority (NEPA).

As at inception in 1896, Nigeria was generating 60KW of electricity which was more than the peak load then. As at 1999, NEPA had an installed capacity of 5600MW of which only 1750MW was available out of the installed capacity, as against the required peak demand of 6000MW. This was as a result of poor investment in power sector infrastructure (Okoro and Chikuni, 2007). Even though the required peak load could not be installed, the installed capacity was not available as a result of lack of maintenance; in fact many of the generating units went off completely.

With the aim of meeting the needs and yearnings of the populace, the Nigerian government embarked on power sector reform. The reform programme led to unbundling of NEPA into seven generating stations, eleven distribution firms and one transmission company (Obadote, 2009). This led to the renaming of NEPA as Power Holding Company of Nigeria (PHCN). All these attempts aimed at encouraging private sector participation. The reform process which started in 2000 has since taken effect in 2004. In order to checkmate the services of Power Holding Company of Nigeria (PHCN), the Nigerian Electricity Regulatory Commission (NERC) was established in 2005 (Sambo, 2008). NERC also has the responsibility of issuing license and regulating the tariffs of expected private investors. Since then, many private investors have indicated interest in taking part in Nigeria Electricity Supply and some have gotten the license but full privatization is yet to commence.

Power Situation So Far

According to Nkwopara et al (2009) of Vanguard Newspaper, the Chairman of Manufacturers Association of Nigeria (MAN), Imo, Abia Branch, Dr Frank S. U. Jacobs, disclosed that an estimated 60 million Nigerians now own power generating sets for their electricity. He added that the same number of people spend a staggering ₦1.56 trillion ($13.35 billion) to fuel them annually. Moreover, he recalled with grief that the Senior Private Sector Specialist at the World Bank, Mr Steven Dimitryer, noted that Nigeria experienced the worst electrical crisis among its contemporaries which underscores the nightmarish generation, distribution and supply in the country. Dr Jacobs concluded by saying that all types of firms in Nigeria experience power outages and 85 percent of them own generators as alternative source of power generation and no country can become industrialized with ordinary standby electric generator. In June 2008, President, Umaru Musa Yar'Adua's Administration swung into a power plan. In that plan, the National Economic Council approved the release of ₦1.2 trillion ($10.24 billion) from the excess crude account. Out of this amount, ₦628.29 billion was to be invested in power and state of emergency was to be declared on the power sector. Furthermore, a committee was set up headed by the then Vice President, Goodluck Jonathan. Other members were Governors Olusegun Agagu (Ondo), Liyel Imoke (Cross River) and Danjuma Goje (Gombe). The Federal Government was to fund the Zungeru and the Mambila hydro plants with the projection of generating 6000 MW by the end of 2009, and 10,000 MW by 2011.

It is unfortunate that by the end of 2009, power generation was still below 4000MW as against the 6000MW, and by 2011 and until now, the situation rather grows worse sometimes, as against the estimated 10,000MW. The big question here is, how about the money that was mapped out and the committee that was set up to manage it?

According to vision 20:2020 draft (2010), power generation capacity as at year 2000 was 1500MW. This was due mainly to lack of investment in maintenance and expansion programmes on existing power plants. By December 2009 it increased to about 3700MW but actual generation was frequently constrained to below 2100MW as a result of inadequate gas supply and low water levels. Since then, power generation has been fluctuating between 3000MW and about 4000MW. Of this amount, gas-fired plants contribute about 64 percent while hydro plants contribute about 31 percent.

So far, only about 40 percent of Nigerians have access to electricity supply. This percentage translates to 64 million, out of the 160 million persons in Nigeria. This low percentage of coverage is due to inadequate transmission and distribution networks. The Federal Government of Nigeria projected to generate, 35,000MW of electricity by 2020, yet power projects in the country are moving at snail speed.

Meanwhile most of the power stations in the country do not generate at their installed capacities. The table below shows the power stations in Nigeria with their installed capacities.

Table 1. Power Stations in Nigeria (Source: Vision 20:2020 draft)

Power Station	Type	Capacity (MW)	Year Completed
Kainji	Hydro	470	1968
Jebba	Hydro	482	1985
Shiroro	Hydro	450	1990
Egbin	Thermal (Gas)	1100	1986
Sapele	Thermal (Gas)	450	1981
Delta	Thermal (Gas)	300	1966
Afam	Thermal (Gas)	420	1965
Ijora	Thermal (Gas)	60	1976
Geregu	Thermal (Gas)	414	2006

Table 2. National Integrated Power Projects (NIPPs). (Source: Vision 20:2020 draft)

NIPP	Projected Output (MW)
Calabar	562.5
Egbema	337.5
Ihovbor	450.5
Gbarain	252.0
Omoku	225.0
Alaoji	960.0
Papalanto	675.0
Omotosho	451.0

Furthermore, the brief analysis below shows how much Nigeria lags in access, quality and availability of public electricity supply, according to Obioma (2010).

- South Africa has 40,000MW for a population of 50 million people
- Brazil has 100,000MW for a population of 192 million people
- The US has 700,000MW for a population of 308 million people
- Nigeria has about 3450MW (out of a total installed capacity of 5200MW) for a population of about 160 million people; can only supply peak power of 3700MW out of a peak load requirement of 5103MW and cannot supply power nation-wide for 24 consecutive hours.

Power Failure Rate in Some Parts of the Country

A look at the reliability of the network of Power Holding Company of Nigeria (PHCN) in some areas of the country shows that the failure rate of electric power in the country is still abysmally high. Okoronkwo and Nsude (2006) assessed the failure rate of Abakaliki District in Ebonyi State. Their study covered a period of three years – from 2001 to 2003. Out of the three fault data tables they got from PHCN Abakaliki District, below is that of year 2003.

Table 3. Summary of Fault Data for Abakaliki Network in 2003 (Source: PHCN Abakaliki District)

Day	Jan	Feb	Mar	Apr	May	Jun	Jul	Aug	Sept	Oct	Nov	Dec
1	2	2	7	2	1	3	-	3	3	10	3	2
2	9	3	9	3	4	3	-	3	3	7	5	4
3	3	1	7	3	2	4	-	4	3	3	1	4
4	3	5	1	1	3	2	-	7	4	7	6	2
5	2	3	1	5	1	7	-	1	2	1	7	5
6	2	1	5	1	5	2	-	4	5	8	5	1
7	5	1	6	5	1	6	-	4	1	3	5	3
8	2	4	3	3	6	3	-	1	7	7	4	2

9	2	2	2	2	5	4	-	3	4	1	3	2
10	1	5	4	6	3	3	-	2	2	4	3	5
11	1	6	5	6	3	3	-	2	2	4	3	5
12	7	11	3	1	3	9	-	3	5	5	4	7
13	2	1	2	8	1	4	-	1	7	6	4	4
14	0	5	6	1	4	5	-	3	5	3	7	2
15	5	2	3	1	3	4	-	1	3	4	2	2
16	1	2	2	1	5	7	-	4	6	3	1	5
17	8	5	1	2	4	10	-	1	6	1	2	1
18	2	1	6	4	6	2	-	3	2	2	2	5
19	1	8	1	7	4	4	-	0	4	5	4	3
20	1	3	4	1	2	2	-	3	7	1	5	1
21	2	2	1	3	5	3	-	1	3	5	2	2
22	5	5	5	4	4	8	-	4	2	4	3	5
23	4	3	4	2	4	2	-	9	3	4	5	6
24	1	5	2	4	4	3	-	1	1	7	4	3
25	2	2	1	7	4	1	-	7	2	3	2	5
26	4	2	3	5	3	3	-	3	5	3	3	3
27	3	3	2	3	7	1	-	1	4	6	1	3
28	1	5	3	2	2	4	-	3	5	1	3	3
29	2	-	5	2	6	2	-	6	7	3	8	4
30	1	-	1	4	6	2	-	4	3	4	3	1
31	7	-	4	-	3	-	-	1	-	1	-	1
Total	**91**	**97**	**109**	**102**	**113**	**115**	**-**	**93**	**117**	**123**	**112**	**100**

From the above table, this paper extracted the following information:

- There was no week in which there were no failures.
- The total number of power failures per month ranged from 91 to 123.
- Only 2 days, out of the 365 days of the year did not experience any power failure.
- The total number of power failures per day ranged from 1 to 11.
- There was no power supply at all in the month of July.

From their analysis of the fault data for the three years, the following information were unraveled:

Table 4. Inferences from Fault Data for Abakaliki Network in 2003

Year	**2001**	**2002**	**2003**
Total faults recorded	1271	1177	1070
Average consumers on the system	17,657	18,460	18,102
Average load (MW)	25.32	27.03	27.05
Maximum load (MW)	31.2	32.5	34.2
System interruption frequency index	0.07	0.06	0.06

Furthermore, it was discovered that the normal effective hours for PHCN Abakaliki District was 9 hours; the average monthly failure of the system was between 2.9 and 3.9; the monthly variability (spread) was between 3.24 and 5.95; and the system reliability decreased as the working hours increased. In other words, approaching the 9th working hour, the system reliability decreased to about 0.27.

Another study carried out by Okoronkwo and Nwangwu (2006) on the reliability of Enugu District of PHCN network for 2002, 2003 and 2004, revealed the following:

Table 5. Summary of 2004 Fault Data for Enugu Network (Source: PHCN Enugu District)

Day	**Jan**	**Feb**	**Mar**	**Apr**	**May**	**Jun**	**Jul**	**Aug**	**Sept**	**Oct**	**Nov**	**Dec**
1	11	2	0	3	0	5	7	6	6	5	2	1
2	2	3	8	3	8	5	0	7	2	5	8	9
3	3	4	0	3	0	8	8	2	4	0	3	3
4	4	2	5	2	3	4	4	4	8	8	7	2
5	3	5	2	8	3	7	3	3	5	0	9	3
6	2	6	7	0	6	5	9	2	3	3	0	4
7	1	0	2	2	7	6	3	4	0	7	2	0

8	1	1	5	6	9	0	4	5	9	8	6	0
9	1	2	1	0	5	8	7	1	6	7	3	7
10	5	3	7	8	7	0	4	3	0	7	2	8
11	1	3	5	0	1	8	0	9	1	8	3	9
12	0	2	6	8	3	4	5	2	2	3	3	7
13	2	1	3	8	6	2	2	7	8	3	0	4
14	2	4	2	2	0	6	0	7	9	2	8	3
15	3	6	6	1	4	9	5	3	0	5	0	2
16	4	1	3	2	8	9	4	12	5	2	3	3
17	9	2	5	2	5	4	8	3	3	5	3	4
18	2	2	7	6	3	6	9	5	7	3	1	0
19	10	4	1	0	7	4	0	4	1	8	7	0
20	7	1	3	5	0	1	3	9	7	2	5	7
21	12	9	3	0	8	1	4	8	0	0	3	2
22	1	0	3	1	5	5	2	2	0	0	5	7
23	3	8	8	2	5	2	7	9	2	0	4	3
24	4	0	2	1	4	3	5	7	2	8	5	5
25	3	3	6	1	0	3	4	12	8	3	8	2
26	1	9	0	4	4	8	9	8	9	7	0	2
27	0	5	8	3	6	0	9	5	3	4	7	0
28	2	1	9	2	5	0	5	2	0	3	0	6
29	1	5	1	1	1	0	2	7	9	0	7	2
30	9	-	1	2	2	8	2	6	5	1	8	3
31	2	-	1	-	5	-	0	6	-	6	-	2
Total	**112**	**94**	**119**	**86**	**130**	**131**	**134**	**170**	**124**	**123**	**122**	**110**

The above table shows the fault data for only year 2004.

From the table, this paper discovered that:

- Every week experienced power failures.
- Only very few days (50) of the year experienced no fault.
- The total number of power failures per month ranged from 86 to 170.
- The total number of power failures per day ranged from 1 to 12.

From the fault data collected over the three years (2002, 2003 and 2004) the information below were derived:

Table 6. Inferences from Fault Data for Enugu Network in 2004

Year	**2001**	**2002**	**2003**
Total faults recorded	1084	1142	1463
Average consumers on the system	71,606	71,305	69,363
Average load (MW)	59.41	51.87	56.35
Maximum load (MW)	65.30	60.50	67.00
System interruption frequency index	0.02	0.02	0.02
Average failures per day	3.06	3.28	4.03
Failure rate (failures per hour)	0.13	0.14	0.17
Mean Time Between Failures (MTBF in hours)	7.96	7.36	5.96
System reliability (%)	62.86	60.93	55.68

This means that the rate of power failure was increasing by the year. Moreover, the system reliability decreased with increase in working hours which was a maximum of 8 hours. At 8 hours of working period, the reliability of the system decreased to about 30% (that is, 0.3).

Unfortunately, over the years and until now, the ugly scenario above has not even improved. Other areas of the country are also experiencing the same or even worse power problems than these. Therefore the rate of power failure in Nigeria now is abysmally high and practically inimical to any form of individual or national growth.

Corruption in the Power Sector

Perhaps the degree of corruption in Nigeria's power sector is the greatest problem militating against the realization of adequate and constant power supply in the country. These corrupt practices flow from the high places to the low places of both the government and the PHCN. Since early 1990s, successive administrations of the Federal Government have always come up with one power programme or the other without realizing any.

They often ended up in a corruption saga without anybody or group brought to book after all. This paper did not look at all of them for want of space.

According to Exclusive Power Probe Report (2008) of the House of Representatives Committee on Power, the sum of $16 billion was misappropriated in the power sector between 1999 and 2007. The committee recommended that 17 figures of interest should be investigated and/or disciplined. These figures include the then President of the Federal Republic of Nigeria, Ministers of power within that period, some federal legislators, some top management officers of PHCN, some top business men and some companies.

The report alleged a number of anomalies including willful manipulation of due process; granting of presidential waivers to contractors instead of going through due process; gross incompetence in managing PHCN and NIPP; project over-scoping; project cost inflation; awarding one contract two times or more; award of huge contracts to unregistered companies; calculated vandalism; sale of PHCN property by its workers; etc.

Not quite long after the committee submitted her report, in 2009 there was a counter scam against Mr Ndudi Elumelu, Chairman of the same House of Representatives committee on power that was probing the scam in the power sector. He was charged to court by EFCC on a 156-count charge bordering on the misappropriation of ₦5.2 billion meant for rural electrification contract. According to Olasanmi (2012) of Blue Print Newspaper, EFCC filed an appeal at the Abuja Court of Appeal against the same set of people on the same case following its dismissal by an Abuja Federal High Court headed by Justice Garba Umar.

Consequent upon the allegations and counter-allegations over the power corruption saga, the power probe committee was dissolved and never set up again. The entire country is still in the dark as to who is culpable – the said 17 personalities or Mr Ndudi Elumelu. The case is still in the court and yet undecided. The future of the case is even seemingly indecisive as the so-called power probe report has been cleverly silenced. The unfortunate reality on ground remains that huge sums of money have been lost to the power sector without a commensurate result to the economy. Nigeria is still grappling with severe power shortage and inadequate power supply.

Consequences of Poor Power Situation

The negative effects of irregular power supply are enormous. Power problem affects both individual and collective general and economic lives. Akinbuleri et al (2008) have it that in the absence of electricity, weaknesses are felt around the developmental growth of the nation. The following are some of the consequences of poor power situation:

- ***Inflation:*** Most establishments run on standby generators these days because of irregularity in the supply of electricity and whatever goods and services delivered by these establishments the money would pass down to the consumers. The consumers end up paying more than necessary because of the high cost of fuel for running the generators.
- ***Damage to Machines and Gadgets:*** Electric power interruption results in damage to production lines in factories. It also leads to damages of household electrical appliances and all these constitute economic waste.
- ***Fire Hazard:*** Several occurrences of fire hazards that are recorded in factories and elsewhere have been traced to incessant power interruptions and fluctuations.
- ***Robbery and Vandalism:*** During blackouts, it is very easy for robbers to operate in homes and banks; and for vandals to vandalize PHCN property.
- ***Pollution by Generators:*** Pollution caused by the fumes and noxious gases emitted by standby generators cause serious degradation to the environment and death to those who inhale them. Many lives have been lost to this hazard. Furthermore, noise pollution from the numerous generators around is discomforting.
- ***Lack of Technological Development:*** Where there is irregular electricity supply, there will certainly be no technological development as technology cannot thrive without electricity. This is the case with Nigeria and that is one strong reason Nigeria is not developing technologically.
- ***Poor Economic Activities:*** Poor power situation stalls a lot of economic and commercial activities. The economy is always kept at a standstill whenever there is power outage.
- ***Poor Academic Development:*** In the absence of electricity, it is difficult to grow academically. This is more so in recent times when many reading materials come in electronic format and studies with such materials cannot work without electricity to power the computer or whichever electronic gadget being used.
- ***Difficulty in Modern Communication:*** Since modern communication is strongly attached to electricity, absence of it hinders communication badly. This can cause a lot of damages or even an outright loss of life in the case of an emergency. Poor power situation has been blamed for the high tariffs being charged by the telecommunication companies in Nigeria, since they run their equipment with generators.

- ***Poor Medical Services:*** Poor power situation also leads to poor medical services as many activities in medical establishments now depend strongly on electricity. Such experiences can lead to loss of life or permanent injury at least.

Conclusion

There is no gainsaying the fact that the amount of electric power generated by Nigeria's power sector is grossly insufficient for the populace. This is why the country has helplessly resorted to a generator-based economy, which explains why it is still highly underdeveloped. To worsen the matter, the installations that generate the insufficient power are constantly suffering from incessant breakdown and poor maintenance culture. Sometimes they are vandalized and all these unfortunate activities lead to general irregularity in power supply.

Nigerians are being short-changed monthly by the so-called estimate bills. They end up paying for power that is grossly not commensurate with their bills.

On the other hand the lip service paid by successive administrations of the Federal Government of Nigeria over power programmes has also adversely affected the total amount of power generated. Furthermore, over-dependence on gas-fired plants for power generation has not also helped matters because whenever there is shortage of gas, power drops. Nigeria has for so long neglected energy sources like hydro, coal, etc, which are rather cheaper to run. It is expedient that a drastic measure is taken to change the current trend of events in the sector if Nigeria must grow.

Recommendations

The following points are recommended as ways of improving the power situation of Nigeria:

- There should be a sincere fight against corruption in the entire power sector including the Ministry of Power, by the relevant government anti-graft agencies. One of the ways to achieve this is by making fraud in the power sector a capital offence.
- Government should realistically embark on building of more power generating stations to increase the total power on the national grid. This should form part of government's medium and long term economic plan with targets set on the amount of power to be generate by the end of each year.
- Focus should be directed more on other sources of energy such as hydro, coal, wind, solar, etc, than on gas as is the current trend in the country. This is because gas-fired plants are used as peak load stations and not as base load stations. Their safe operation time is 3 hours per day as against hydro or coal turbine for instance, which can run for months consecutively without breaking down (Nwangwu, 2011).
- There should be regular training of the maintenance personnel of PHCN to maintain power installations. There should also be regular routine maintenance and periodic overhaul maintenance of the power equipment to keep the system running.
- Ring main system should be used in the transmission and distribution networks instead of the prevalent radial system. Ring main system ensures that power is still available to a greater section of the network whenever there is a fault and consequent power failure.
- Obsolete power plants should be replaced entirely with modern ones instead of grappling with the rigour of trying to source their parts.
- Power installations should be guarded by soldiers 24 hours of the day to stop vandalism. The way PHCN workers opposed Federal Government's intention to guard power facilities with soldiers is highly suspicious.
- Government should ban sale of power facility parts in the open market.
- Billing should be done by prepayment meter and not by the current method of estimate billing where consumers are most times over-billed. This over billing leads to failure of consumers to pay up and when they are disconnected they attempt reconnecting it themselves and some times, this leads to introduction of faults to the system.
- If government does not have the moral courage to play the parts that concern her as stated above, then she should sincerely privatize the power sector fully and allow competition and efficiency in service delivery to drive the sector just like the telecommunications sector.

References

[1]. Akinbulire, T. O. (2008). Data-Based Analysis of Power System Crisis in Nigeria. Esptaee, University of Nigeria, Nsukka.

[2]. Anyahie, M. U. (2011). Renewable Energy for Sustainable National Development. Journal of Science and Engineering Development, 4(4): 8 – 18.

[3]. Chesa, C. (2008). "Governors Endorse Hike in Electricity Tariff." Daily Independent Newspaper, 3(1510).

[4]. Chukwuanukwu, E. (2008). "Why Emergency in Power Sector is Stalled." Sunday Independent Newspaper, 2(167).

[5]. Chiedozie, I. (2008). "NEC Okays ₦569.8 Billion for Power Sector." The Punch Newspaper, 17(20,140): Pp 2.

[6]. Federal House of Representatives of Nigeria (2008). Exclusive Power Probe Report.

[7]. Federal Republic of Nigeria (2010). Nigeria Vision 20:2020 Draft: Sectoral Plans and Programmes.

[8]. Nkwopara, C. (2009). "60 Million Nigerians Now Own Power Generators – M. A. N." Vanguard Newspaper, 25(60,768): Pp 1 & 5.

[9]. Nwangwu, E. O. (2011). Electrical Power Load Shedding: Implications for a Growing Economy. Journal of Science and Engineering Development, 4(4): 2 – 7.

[10]. Obadote, D. J. (2009). "Energy Crisis in Nigeria: Technical Issues and Solutions". Power Sector Prayer Conference.

[11]. Obioma, G. (2010). "Reconstructing Polytechnic Education in Nigeria for the Attainment of Vision 20:2020." 11th Convocation Lecture of Akanu Ibiam Federal Polytechnic Unwana Afikpo, Ebonyi State.

[12]. Okedu, K. E. (2010). Assessment of Thermal Generating Plants in Nigeria. The Pacific Journal of Science and Technology, 11(2): 122 – 131.

[13]. Okoro, O. I. and Chikuni, E. (2007). Power Sector Reforms in Nigeria: Opportunities and Challenges. Journal of Energy in Southern Africa, 18(3).

[14]. Okoronkwo, C. and Nsude, F. I. (2006). An Assessment of System Network Failure of Power Holding Company of Nigeria (PHCN) PLC Abakaliki District Using Statistical Methods. Journal of Science and Engineering Development, 1(1): 15 – 25.

[15]. Okoronkwo, C. and Nwangwu, E. O. (2006). Distribution System Reliability Assessment of Enugu District of Power Holding Company of Nigeria (PHCN) for Three Years. Journal of Science and Engineering Development, 1(1): 27 – 38.

[16]. Olasanmi, K. (2012). "EFCC Drags Akingbola, Elumelu to Appeal Court." Blueprint Online Newspaper

[17]. Onohaebi, O. S. and Lawal, Y. O. (2010). Power Maintenance Culture: The Bane to Electric Power Generation in Nigeria. Journal of Economics and Engineering: 28 – 33.

[18]. Sambo, A. S. (2008). Matching Electricity Supply with Demand in Nigeria. International Association for Energy Economics, Fourth Quarter: 32 – 36

International Journal of Latest Research in Engineering and Technology (IJLRET)
ISSN: 2454-5031(Online)
www.ijlret.com‖ Volume 1 Issue 4‖September 2015 ‖ PP 32-40

Observer Design for Dynamical Model of the Operation of the Hypothalamus - Pituitary - Thyroid (HPT) Axis in Autoimmune Thyroiditis

Dipa Sharma[1] and P. Pradhan[2]
[1](*Dept of Mathematics, Govt. PG College Uttarkashi, Uttarakhand,India)*
[2](*Department of Mathematics, GKV Haridwar, Uttarakhand,India)*

ABSTRACT: *An observer construction method for semilinear descriptor systems of the form* $E\dot{x} = Ax + f(x)$, *where* E *(singular),* A *are linear operators and* f *is a nonlinear function, is studied. Using a new approach, based on matrix theory, it is shown that an observer may be designed under certain conditions on system operators if one linear matrix inequality (LMI) is satisfied. The dynamical Model of the Operation of the HPT Axis in Autoimmune Thyroiditis is rewritten in the semilinear descriptor system form and then using proposed observer all the states are estimated. Numerical simulations are presented to demonstrate the effectiveness of the proposed approach*.
KEYWORDS-*semilinear descriptor system, LMI, HPT axes*

I. INTRODUCTION

The thyroid stimulating hormone (TSH) is synthesized and secreted into the blood by the pituitary gland. In response to TSH, the thyroid gland secretes thyroxine (T4) into the blood, in which 99 percent of T4 binds to proteins in blood serum and the remaining 1 percent circulates as free thyroxine (FT4). This in turn inhibits the secretion of TSH in the pituitary gland the secretion of TSH in the pituitary gland. This mechanism is called a negative feedback control through the hypothalamus-pituitary-thyroid (HPT) axis. The existence of the negative feedback control is to maintain the adequate levels of FT4 in the blood, which referred to a set point of the HPT axis. The set point of the HPT axis varies greater between individuals than in the same individual sampled repeatedly over time [1]. Autoimmune thyroiditis is a complex disorder in which the immune system attacks the thyroid gland with both proteins and immune cells. More precisely, the immune system produces proteins (thyroid peroxidase anti-bodies (TPOAb) and thyroglobulin antibodies (TGAb)) against the thyroid follicle cell membrane proteins (thyroid peroxidase (TPO) and thyroglobulin (TG)) in the blood. These proteins induce thyroid follicle cell lysis by binding with TPO and TG respectively. Thus, autoimmune thyroiditis interrupts the normal thyroid operation and eventually disrupts feedback control. Consequently, one develops symptoms (like, goiter), signs (like, hyperactivity), and some clinical conditions, like, euthyroidism (normal FT4 and TSH levels in the blood), subclinical hypothyroidism (normal FT4, but TSH above normal levels),overt (clinical) hypothyroidism (underactive thyroid gland- low FT4 levels and TSH above nor-mal levels) or hashitoxicosis (transient hyper to hypothyroidism). Hashitoxicosis is a life-threatening abnormal clinical condition.

Since the famous work of Danziger and Elmergreen [2, 3], many authors have discussed mathematical models related to the thyroid- pituitary system. We refer to the work of Roston [4], Rashevsky [5], Norwich and Reiter [6], Distefano and Stear [7], and Degon at el. [8]. In this paper, we discuss the following model, which is adopted from recent work of Pandiyan [9] where author has analyzed the dynamical behavior of operations of the HPT axis in autoimmune thyroiditis.

$$\varepsilon \frac{dTSH}{dt} = \frac{k_1}{k_2} - \frac{k_1 FT4}{k_2(k_a + FT4)} - TSH, \tag{1a}$$

$$\frac{dFT4}{dt} = \frac{k_3 T\ TSH}{(k_d + TSH)} - k_4 FT4, \tag{1b}$$

$$\frac{dT}{dt} = k_5\left(\frac{TSH}{T} - N\right) - k_6 Ab\ T, \tag{1c}$$

$$\frac{dAb}{dt} = k_7 Ab\ T - k_8\,\mathrm{Ab}, \tag{1c}$$

where $k_1, k_2, k_3, k_4, k_5, k_6, k_7, k_8, k_a, k_d$ and N are suitable constants and $\varepsilon << 1$ is very small positive constant. Small ε suggests that the model is on different time scale and can be considered as a descriptor system in whole. We redefine the model variables as follows

- $TSH(t) =$ Concentration of thyroid stimulating hormone(mU/L) at time t in blood.
- $FT4(t) =$ Concentration of free thyroxine (pg/mL) at time t in blood.
- $T(t) =$ the functional size of thyroid gland (active part of the gland) (L) at time t .
- $Ab(t) =$ Concentration of (unbound) anti-thyroid antibodies(U/mL) at time t in blood.

The above model is based on the following assumptions

- Anti-thyroid antibodies attack the thyroid follicle cells whereby the gland stimulates more activity of the immune response. The damaged part of the gland is no longer functional (active) in secreting thyroid hormones.

- TSH stimulates the functional (active) part of the thyroid gland for growth and hormonal secretion.
- TSH disappears from the blood through a non-specific excretion mechanism.
- TSH distributes uniformly throughout the functional part of the gland. The hypothalamus pituitary function is intact.
- The blood concentration of iodine is sufficient for synthesis of hormonal production.
- The total TSH receptor concentration in the gland is approximately constant since the TPOAb and TGAb do not attack the TSH receptors.

In this paper, we design an observer for the states of the system (1), if we have the following output equation

$$y = TSH, \tag{2}$$

i.e., the problem is to estimate all the state variables of the model (1) if only the TSH values are available. Thus, the problem is to design an observer for the system (1)-(2). An observer is a proposed dynamical system to estimate the state of given dynamical system using only the measured output and known input of the latter. The observe design problem has been discussed for linear and semilinear normal systems in very details and now a days mathematicians and engineers are extending these approaches to descriptor systems. For example, in [10], author has considered a nonlinear observer for a class of continuous nonlinear descriptor systems with unknown inputs and faults. Koenig [11] has designed full-order observers for nonlinear descriptor systems with unknown input, when the spectral domain of the unknown inputs is unknown or in low frequency range. Apart from these, the observer design approach has been used on some biological problems too. In [12], a nonlinear mathematical model of the phytoplanktonic growth has been developed and then observed for the states.

II. PROBLEM DESCRIPTION AND ITS MATHEMATICAL FORMULATION

The problem is to design an observer for the states of the system (1) which has the output as described by the equation (2). To achieve the goal, first we assume $\varepsilon = 0$ and write the system (1)-(2) in the following descriptor form

$$E\dot{x} = Ax + f(x) \tag{3(a)}$$

$$y = Cx \tag{3(b)}$$

where

$$E = \begin{bmatrix} 0 & 0 & 0 & 0 \\ 0 & 1 & 0 & 0 \\ 0 & 0 & 1 & 0 \\ 0 & 0 & 0 & 1 \end{bmatrix}, \quad x = \begin{bmatrix} TSH \\ FT4 \\ T \\ Ab \end{bmatrix}$$

$$A = \begin{bmatrix} -1 & 0 & 0 & 0 \\ 0 & -k_4 & 0 & 0 \\ 0 & 0 & 1 & 0 \\ 0 & 0 & 0 & -k_8 \end{bmatrix},$$

$$f(x)=\begin{bmatrix} \frac{k_1}{k_2}-\frac{k_1FT4}{k_2(k_a+FT4)} \\ \frac{k_3TTSH}{K_d+TSH} \\ k_5(\frac{TSH}{T}-N)-k_6AbT \\ k_7AbT \end{bmatrix}, \text{ and}$$

$$C=\begin{bmatrix}1 & 0 & 0 & 0\end{bmatrix}.$$

It can be checked immediately that the following equation is satisfied by the system (3)

$$Rank\begin{bmatrix} E \\ C \end{bmatrix}=n, \tag{4}$$

where $n=4$ is the order of the system (1). Now using the algorithm 1, a full column rank matrix R is constructed such that the system (3) is equivalent to the following descriptor system

$$\tilde{E}\dot{x}=\tilde{A}x+Rf(x) \qquad 5(a)$$

$$y=Cx \qquad 5(b)$$

where $\tilde{E}=RE$ and $\tilde{A}=RA$. Here equivalent means both system (3) and system (5) have the same solution for a given initial condition.

Algorithm 1

1. Carry out the singular value decomposition (SVD) of matrix $C=U_1\begin{bmatrix} D_1 & 0 \\ 0 & 0 \end{bmatrix}V_1^T$.

2. Calculate $P=V_1\begin{bmatrix} D_1^{-1} & 0 \\ 0 & I_{n-r} \end{bmatrix}$.

3. Calculate $E_1=EP\begin{bmatrix} 0_{r\times(n-r)} \\ I_{n-r} \end{bmatrix}$, where $r=rank(C)$.

4. Carry out the SVD of matrix $E_1=U_2\begin{bmatrix} D_2 \\ 0 \end{bmatrix}V_2^T$.

5. Calculate $R_0=\begin{bmatrix} 0 & I_{m+r-n} \\ V_2D_2^{-1} & 0 \end{bmatrix}U_2^T$.

6. Calculate $R=P\begin{bmatrix} 0_{(n-m)\times m} \\ R_0 \end{bmatrix}$.

It is easy to verify that the system (3) satisfies the equation (4), the system (5) satisfies the following property

$$rank\begin{bmatrix} 1-\tilde{E} \\ C \end{bmatrix}=rank(C)=1. \tag{6}$$

Mathematically, the problem is to construct matrices N, L and M of compatible dimensions such that that the following normal system becomes a full-order observer (i.e., $\hat{x} \to x$ as $t \to \infty \forall z(0), x(0) \in \mathbf{R}^n$) for the system (5).

$$\dot{z} = Nz + Ly + Rf(\hat{x}) \quad 7(a)$$

$$\hat{x} = z + My \quad 7(b)$$

Since (3) and (5) are equivalent systems, observer for the system (5) works for the system (3) also.

III. METHODOLOGY

From the system (5) and (7), it is clear that error vector

$$\begin{aligned} e &= x - \hat{x} \\ &= x - z - MCx \\ &= (I - MC)x - z \\ &= \tilde{E}x - z \end{aligned} \quad (8)$$

gives the dynamics

$$\begin{aligned} \dot{e} &= \tilde{E}\dot{x} - \dot{z} \\ &= \tilde{A}\dot{x} + Rf(x) - (Nz + LCx + Rf(\hat{x})) \\ &= (\tilde{A} - LC)x - N(\tilde{E}x - e) + R\Delta f \\ &= Ne + (\tilde{A} - LC - N\tilde{E})x + R\Delta f \\ &= Ne + (\tilde{A} - LC - N + NMC)x + R\Delta f \\ &= Ne + R\Delta f \end{aligned} \quad (9)$$

Where $\Delta f = f(x) - f(\hat{x})$. In order to write the equations (8) and (9) in above form, we have used the following equation:

$$\tilde{E} = I - MC \quad (10)$$

$$N = \tilde{A} - KC \quad (11)$$

$$K = L - NM \quad (12)$$

Thus, the design problem of the observer (7) now boils down to finding the matrices K, N and L so that the above equations (10), (11) and (12) are satisfied with the stability of matrix N Now, to show the existence of matrix K such that matrix N (in equation (11)) is stable, consider a matrix $P > 0$ and a Lyapunov function $V = e^T Pe$. Since $P > 0$, we have $V > 0$. Moreover,

$$\begin{aligned} \dot{V} &= \dot{e}^T Pe + e^T P\dot{e} \\ &= (Ne + R\Delta f)^T Pe + e^T P(Ne + R\Delta f) \\ &= e^T N^T Pe + \Delta f^T R^T Pe + e^T PNe + e^T PR\Delta f \end{aligned} \quad (13)$$

Since for some $T > 0$, in time interval $(0, T)$ the nonlinear function satisfies the inequality $\Delta f^T \Delta f \le \lambda^2 e^T e$, where $\lambda > 0$ is some positive content. Therefore, by rearranging equation (13), we get

$$\dot{V} \leq e^T(N^TP+PN)e+\Delta f^T R^T Pe+e^T PNe + e^T PR\Delta f+\lambda^2 e^T e-\Delta f^T \Delta f$$

$$\dot{V} \leq \begin{bmatrix} e^T & \Delta f^T \end{bmatrix} \begin{bmatrix} N^TP+PN+\lambda^2 I & PR \\ R^TP & -I \end{bmatrix} \begin{bmatrix} e \\ \Delta f \end{bmatrix}$$

Now for $\dot{V}<0$,

$$\begin{bmatrix} N^TP+PN+\lambda^2 I & PR \\ R^TP & -I \end{bmatrix} < 0 \tag{14}$$

Using equations (11) and (14), we get,

$$\begin{bmatrix} (\tilde{A}-KC)^T P+P(\tilde{A}-KC)+\lambda^2 I & PR \\ R^TP & -I \end{bmatrix} < 0$$

$$\begin{bmatrix} \tilde{A}^T P+P\tilde{A}-C^T K^T P-PKC+\lambda^2 I & PR \\ R^TP & -I \end{bmatrix} < 0$$

$$\begin{bmatrix} \tilde{A}^T P+P\tilde{A}-C^T \tilde{K}^T-\tilde{K}C+\lambda^2 I & PR \\ R^TP & -I \end{bmatrix} < 0, \tag{15}$$

where $\tilde{K}=PK$. The above LMI (15) has to be solved for $\tilde{K}$ in order to prove the stability of the error dynamics (9). Using this $\tilde{K}$, we can find K and thus matrix N. Now, by K, N and equation (12), matrix L can be calculated. Existence of M is simple implication of equation (10) whose solvability is determined by (6). With all thus calculated matrices K, N, L and M, the observer (7) can be designed.

IV. SIMULATION RESULTS

For the simulation purpose, we take the values for the system (3) as shown in the following table. This data has been taken from [9]. With above data, matrices E, A and C for the system (3) will become as follows

$$E=\begin{bmatrix} 0 & 0 & 0 & 0 \\ 0 & 1 & 0 & 0 \\ 0 & 0 & 1 & 0 \\ 0 & 0 & 0 & 1 \end{bmatrix},$$

$$A=\begin{bmatrix} -1 & 0 & 0 & 0 \\ 0 & -0.099021 & 0 & 0 \\ 0 & 0 & 0 & 0 \\ 0 & 0 & 0 & -0.035 \end{bmatrix},$$

$$C=\begin{bmatrix} 1 & 0 & 0 & 0 \end{bmatrix}.$$

Table 1: Values of Parameters for the System (3)

Parameters	Values Used	Units
k_1	5000	$\frac{mU}{L*day}$
k_2	16.635	$\frac{1}{day}$
k_3	86	$\frac{pg}{mL*L*day}$

k_4	0.099021	$\frac{1}{day}$
k_5	1	$\frac{L^3}{mU * day}$
k_6	1	$\frac{mL}{U * day}$
k_7	1.3421	$\frac{1}{U * day}$
k_8	0.035	$\frac{1}{day}$
k_a	0.0434	$\frac{pg}{mL}$
k_d	0.0021	$\frac{mU}{L}$
N	66.7	$\frac{mU}{L^2}$

Since the system (3) satisfies the assumption (H1), by the algorithm 1, we calculate

$$R = \begin{bmatrix} -1 & 0 & 0 & 0 \\ 0 & 1 & 0 & 0 \\ 0 & 0 & 1 & 0 \\ 0 & 0 & 0 & 1 \end{bmatrix}.$$

Thus, system (5) is described by the matrices

$$\bar{E} = \begin{bmatrix} 0 & 0 & 0 & 0 \\ 0 & 1 & 0 & 0 \\ 0 & 0 & 1 & 0 \\ 0 & 0 & 0 & 1 \end{bmatrix},$$

$$\bar{A} = \begin{bmatrix} 1 & 0 & 0 & 0 \\ 0 & -0.099021 & 0 & 0 \\ 0 & 0 & 0 & 0 \\ 0 & 0 & 0 & -0.035 \end{bmatrix}.$$

By MATLAB LMI tool box, we ensure that LMI (15) is solvable for the system (5) as

$$\bar{K} = e+08 \begin{bmatrix} 2.412 \\ 0 \\ 0 \\ 0 \end{bmatrix} \text{ and}$$

$$P = e+06 \begin{bmatrix} 5.9208 & 0 & 0 & 0 \\ 0 & 0.0026 & 0 & 0 \\ 0 & 0 & 0 & 0 \\ 0 & 0 & 0 & 0.0009 \end{bmatrix}.$$

Thus,

$$K = P^{-1}\bar{K} = \begin{bmatrix} 407.3756 \\ 0 \\ 0 \\ 0 \end{bmatrix}.$$

Finally, we calculate from equations (10) and (12)

$$M = \begin{bmatrix} 1 \\ 0 \\ 0 \\ 0 \end{bmatrix}, \text{ and } L = \begin{bmatrix} 1 \\ 0 \\ 0 \\ 0 \end{bmatrix}.$$

Using the above matrices N, L, M and R , the observer is designed for the system (3). We have plotted the true and estimated values of the states in Figure 1-4 for arbitrary initial conditions $TSH(0) = 2, FT4(0) = 13, T(0) = 15, Ab(0) = 16$ for the system (3) and $z_1(0) = 10, z_2(0) = 24, z_3(0) = 5, z_4(0) = 20$ for the proposed observer (7). It can be seen from the graphs that estimated values of the states follow the true states well. Hence, the system (7) works as an observer for the system (3).

V. CONCLUSION

We have studied the dynamical Model of the Operation of the HPT Axis in Au-toimmune Thyroiditis. The state TSH has been considered as only output state. Based on a LMI tool for the Lyapunov stability, an observer has been proposed to estimate all other states after rewriting the given system into a descriptor form. Simulations results have verified the effectiveness and validity of this approach.

REFERENCES

[1] S. Andersen, K.M. Pedersen, N.H. Bruun, and P. Laurberg, "Narrow individual variations in serum T(4) and T(3) in normal subjects: a clue to the understanding of subclinical thyroid disease," J. Clin. Endocrinol. Metab., vol. 87, no. 3, pp. 1068-1072, 2002.

[2] L. Danziger and G. Elmergreen, "Mathematical theory of periodic relapsing catatonia," Bull. Math. Biol., vol. 16, no. 1, pp. 15-21, 1954.

[3] L. Danziger and G. Elmergreen, "The thyroid-pituitary homeostatic mechanism," Bull. Math. Biol., vol. 18, no. 1, pp. 1-13, 1956.

[4] S. Roston, "Mathematical representation of some endocrinological systems," Bull. Math. Biol., vol. 21, no. 3, pp. 271-282, 1959.

[5] N. Rashevsky, "Mathematical theory of biological periodicities: Formulation of then-body case," Bull. Math. Biol., vol. 30, no. 4, pp. 735-749, 1968.

[6] K.H. Norwich and R. Reiter, "Homeostatic control of thyroxin concentration expressed by a set of linear differential equations," Bull. Math. Biophys, vol. 27, no. 2, pp. 133-144, 1965.

[7] J.J. Distefano and E.B. Stear, "Neuroendocrine control of thyroid secretion in living systems: a feedback control system model," Bull. Math. Biophys, vol. 30, no. 1, pp. 3-26, 1968.

[8] M. Degon M, S.R. Chipkin, C.V. Hollot, R.T. Zoeller, and Y. Chait , "A computational model of the human thyroid," Math. Biosci., vol. 212, no. 1, 22-53, 2008.

[9] B. Pandiyan, "Mathematical Modelling and Dynamical Analysis of the Op-eration of the Hypothalamus-Pituitary-Thyroid (HPT) Axis in Autoimmune (Hashimoto's) Thyroiditis," , Dissertations, Marquette University 2011.

[10] D. N. Shields, "Observer design and detection for nonlinear descriptor sys-tems," Int. J. Control, vol. 67, no. 2, pp. 153–168, 1997.

[11] D. Koenig, "Observer design for unknown input nonlinear descriptor sys-tems via convex optimization," IEEE Trans. Autom. Control, vol. 51, no. 6, 1047–1052, 2006.

[12] O. Bernard, G. Sallet, A. Sciandra, "Nonlinear observers for a class of Biological Systems: Application to Validation of a Phytoplanktonic Growth Model," IEEE Trans. Autom. Control, vol. 43, no. 8, pp. 1056–1065, 1998.

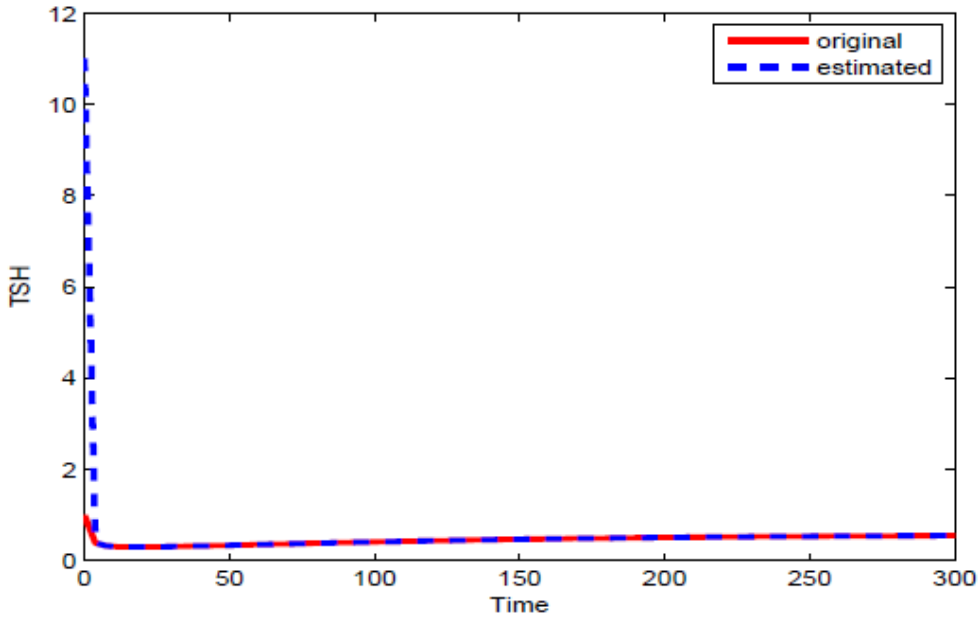

Figure 1: Time response of the original state TSH and estimated state TSH.

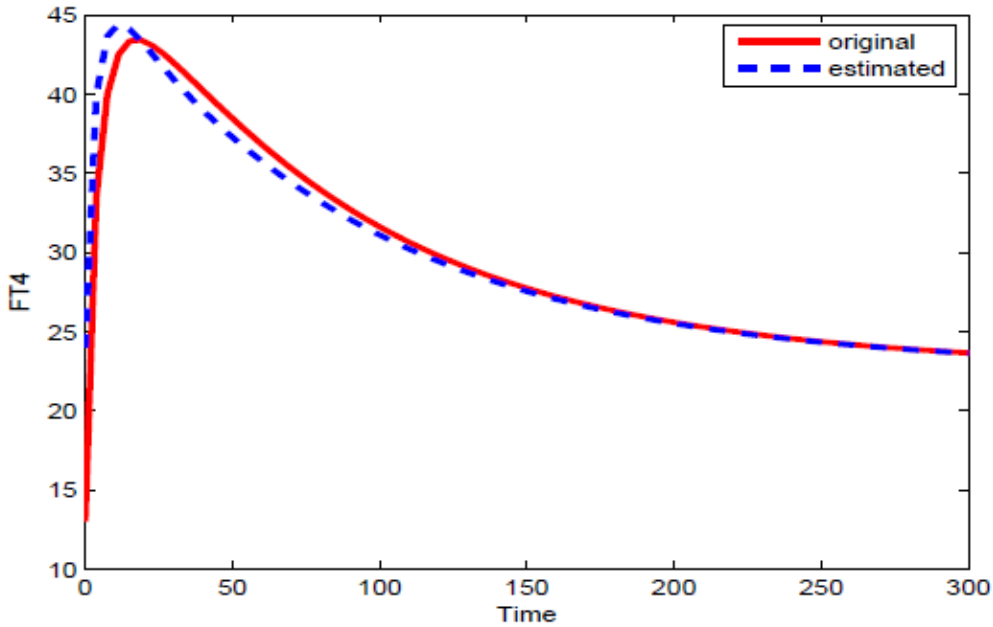

Figure 2: Time response of the original state FT4 and estimated state FT4.

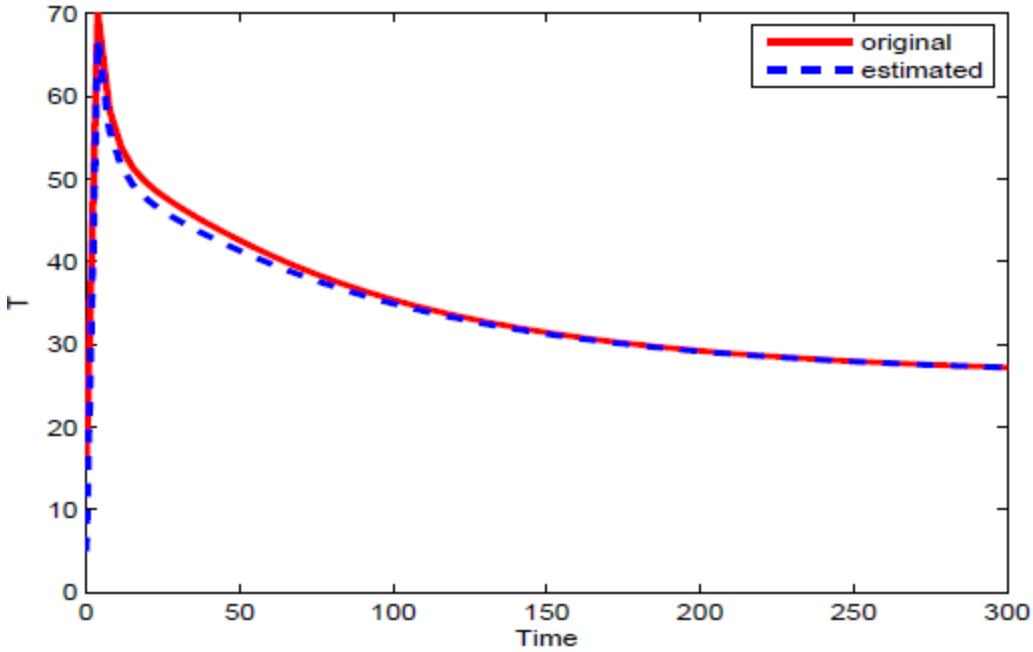

Figure 3: Time response of the original state T and estimated state T.

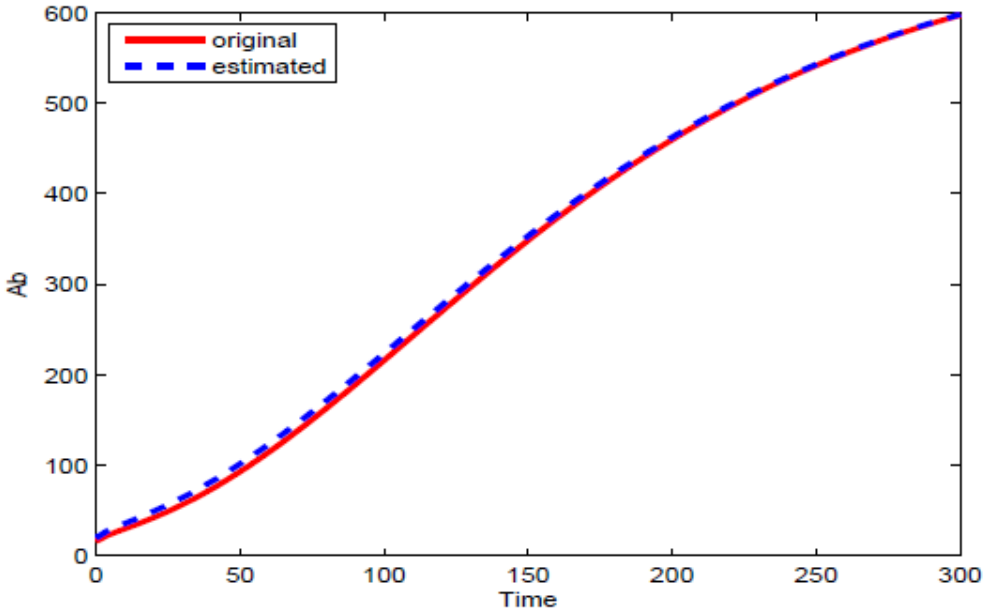

Figure 4: Time response of the original state AB and estimated state Ab.

International Journal of Latest Research in Engineering and Technology (IJLRET)
ISSN: 2454-5031(Online)
www.ijlret.com‖ Volume 1 Issue 4‖September 2015 ‖ PP 41-46

Web-Based Employees' Decision Support System for Nigerian Universities

Okoro F. M[1], Eriata U. F[2], John-Otumu M. A[3] & Okoh, N. A.[4]
[1, 2, 3, 4] *Department of Computer Science, Ambrose Alli University, Ekpoma, Nigeria.*
frank.eriata@gmail.com; Macgregor.otumu@gmail.com

ABSTRACT: Most Universities in Nigeria today are faced with decision based challenges as per precise and pre-knowledge based information on employees' recruitment / retirement and proper appraisal exercise. These have resulted to improper appraising of employees due to favoritism, or employees staying and collecting salaries more than necessary. This Developed Employees Decision Support System application (EDSS) is an interactive web-based application intended to assist decision makers in the University environment identify and solve employees' recruitment and retirement related problems, complete decision process tasks, and make proper decisions. The web based application was developed using PHP, JavaScript, HTML and MySQL. Ambrose Alli University, Ekpoma, Nigeria was used as our test bed environment. The developed system was used to automate staff records; classification, evaluation and appraisal were also executed effectively and efficiently using the system. The Developed system is recommended for Universities in Nigeria and other developing countries.

Keywords: Employees', Decision Support System, Development, Appraisal, University system

1.0 INTRODUCTION

Decision Support System (DSS) is a specific class of computerized information system that supports business and organization for the purpose of decision-making activities. A properly designed Decision Support System is an interactive software-based system intended to help decision makers compile useful information from raw data, documents, personal knowledge, or business models to identify and solve problems and make decisions. A Web-based DSS is referred to as a computerized system that delivers decision support information or decision support tools to a manager, business analyst, or customer using a "thin-client" Web browser like Netscape Navigator or Internet Explorer [1]. [2] worked on decision support systems. This system emphasizes the what, how and why of building Web-based DSS.

For many reasons, the logical architecture to use for building contemporary decision support applications is the Internet or a corporate intranet built using Web technologies. The dominant information technology platform in companies is changing from mainframes and Local Area Network (LAN) based client-server systems to Web and Internet technologies [3]. This technology change is expanding to what [4] Keen (1991) called "information reach" and "information range." The reach of information and decision support systems has expanded significantly to serve any size group of internal and external stakeholders. Document-driven DSS manages, retrieve, summarize and manipulate unstructured information in a variety of electronic formats. In general, they support a decision maker by electronically keeping track of textually represented knowledge that could have a bearing on decisions [5].

Fuzzy logic's approach to control problems mimics how a person would make decisions, much faster only. It resembles human decision making with its ability to work from approximated data and find precise solutions. According to [6] fuzzy logic is a powerful problem solving methodology that captures the way humans represent and reason with the real-world knowledge in the face of uncertainty. Uncertainty arises due to generality, vagueness, ambiguity, chance, or incomplete knowledge. Fuzzy logic provides a simple way to draw definite conclusions from vague, ambiguous or imprecise information.

Employee evaluation is based on many parameters like classification of Commitment, Attitude, Communication Skills, Leadership qualities, Innovativeness, Responsibility, etc. These parameters are very fuzzy and not just black and white. It employs spectrum of colors, accepting that things can be partly true and partly false at the same time. Such human like approach is well implemented using fuzzy logic, which models human like decision making and common sense. Performance appraisal is a formal management system that provides for the evaluation of the full or contract staff, date of employment and expiration of employment, quality of an individual's performance in an organization. Performance appraisal has the means to evaluate an employee's current and past performance relative to the employee's performance standards. It is a process of evaluating employee's actual performance relative the standard performance so as to give feedback to the employee that will help him or her to improve the job performance.

The problem of employee decision in the institution is enormous. Both staff and management

encounter this on a daily basis. Below are some of the problems identified:

i. Poor information retrieval system.
ii. Payment of some staff whose contract has expired or appointment terminated due to one reason or the other.
iii. Security issues: employees getting direct access to their files some times and records being falsified, thereby compromising the data integrity.
iv. Difficulty in accessing staff personal status.

2.0 MATERIALS AND METHODS

We actually deployed the client and server end of this application in a University campus network environment (Ambrose Alli University, Ekpoma, Edo State, Nigeria). Data about the Employee Decision Support System (EDSS) was gathered using questionnaire and system observation. The data was fed into the developed system through an interface to capture users' information. All the logic and control between the clients and server in order to send and receive messages by routing and storage takes place within the internal software architecture of the developed system.

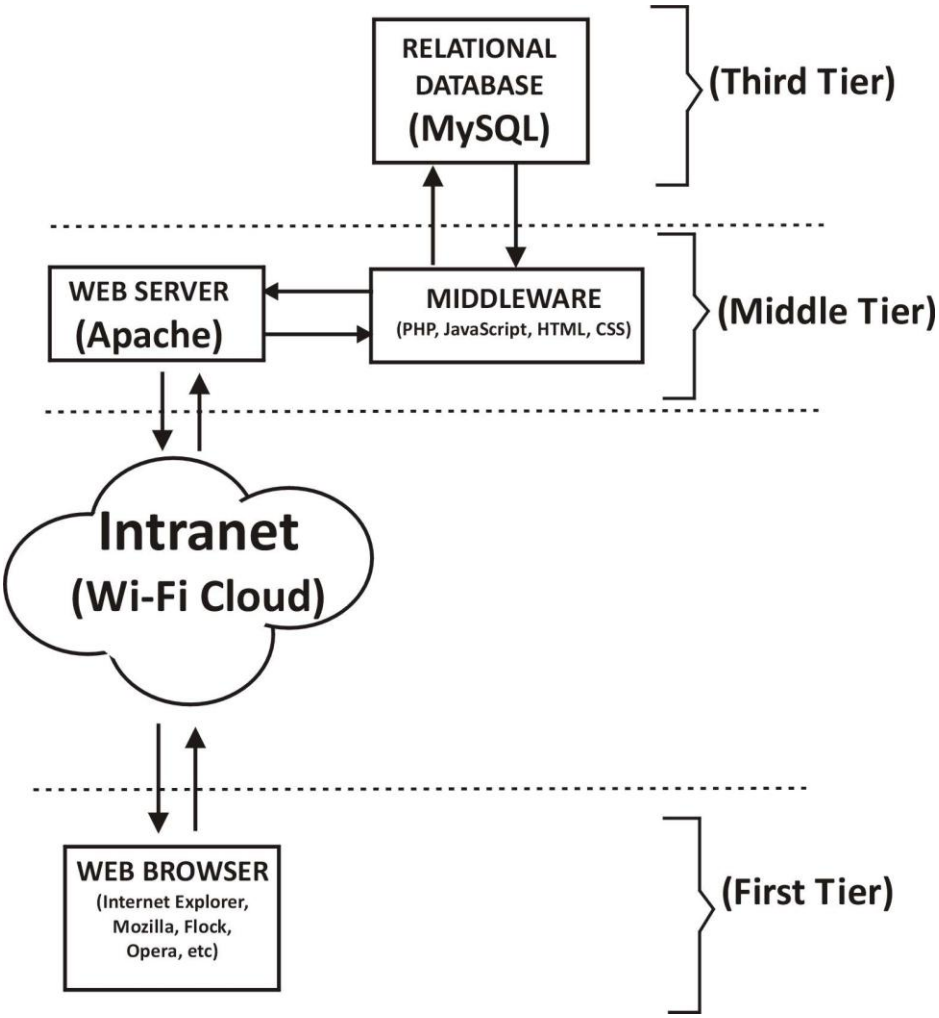

Figure 1: Web Application Architecture for the EDSS

The web works based on the client/server architecture, that is, both a central server and a client application are responsible for some amount of processing. Web applications (WebApps) are applications that are accessed with a web browser over a network such as the Internet or intranet. We structured our proposed web application as a 3-tier application. That is the web browser constitutes the first tier, a middleware engine using some dynamic web content technology such Hypertext Preprocessor (PHP), JavaScript, Hyper Text Markup Language (HTML), and Cascading Style Sheet (CSS). The database server being the third tier in which we used MySQL which is a relational database management system.

Figure 1 shows our proposed web architecture. Connection is established to the web server via the Wi-Fi Cloud using client wi-fi enabled devices. The web browser is used to make request to the web server; the web server searches the middleware engine for the information requested by the web browser, if found or not, the web server responds by returning the interrupt back to the browser which either displays the home page of the site found or it displays site not found.

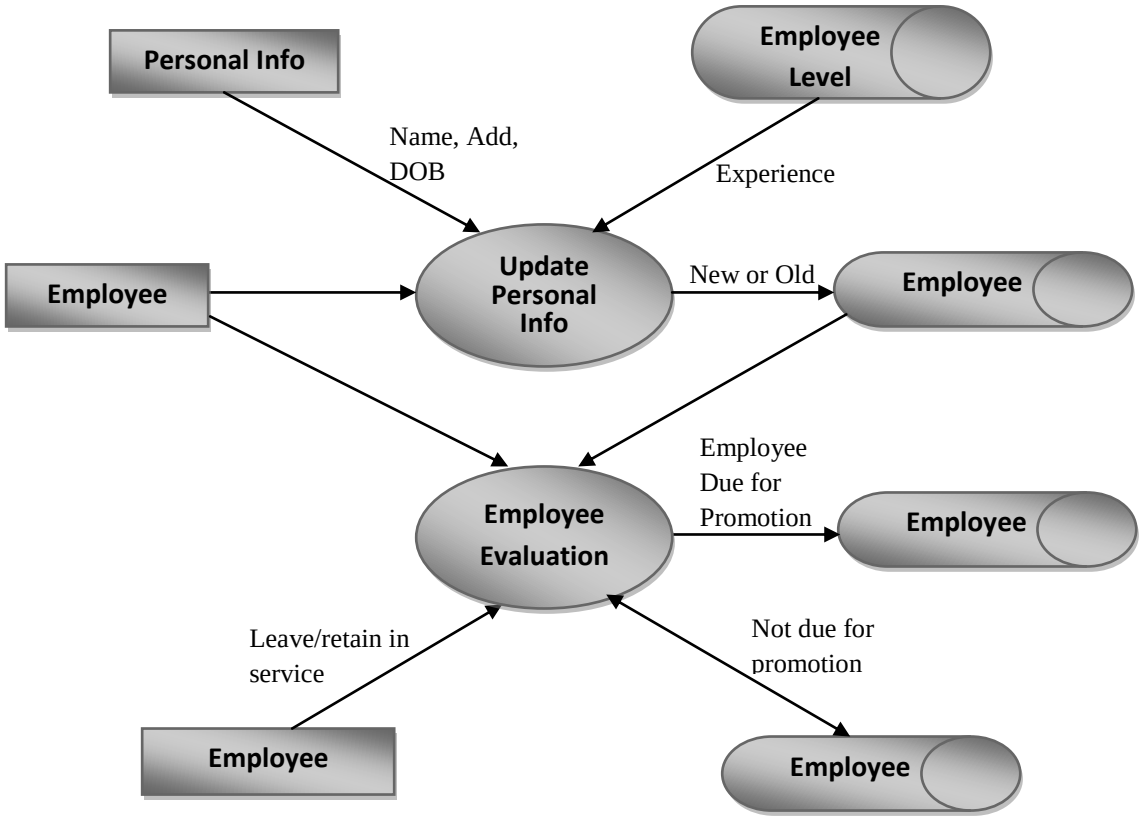

Figure 2: Employee Update and evaluation context DFD

3.0 RESULTS AND DISCUSSION

3.1 Development Tools and Environment

The system environment and development tools are listed in Table 1.

Table 1: Development tools and environment

System Hardware	Intel Core2Duo P8600 2.4GHz 4GB
System Software	O.S.: 1. Microsoft Windows XP 2. Microsoft Windows 7 Web Browser: Internet Explorer Mozilla Firefox Crazy Browser
Programming language and tools	JavaScript PHP HTML MySQL

3.2 System Test

In the experiment, we tested the system whether it can perform the following: authentication, users' rights and privileges, capture data through an interface, generate reports and so on.

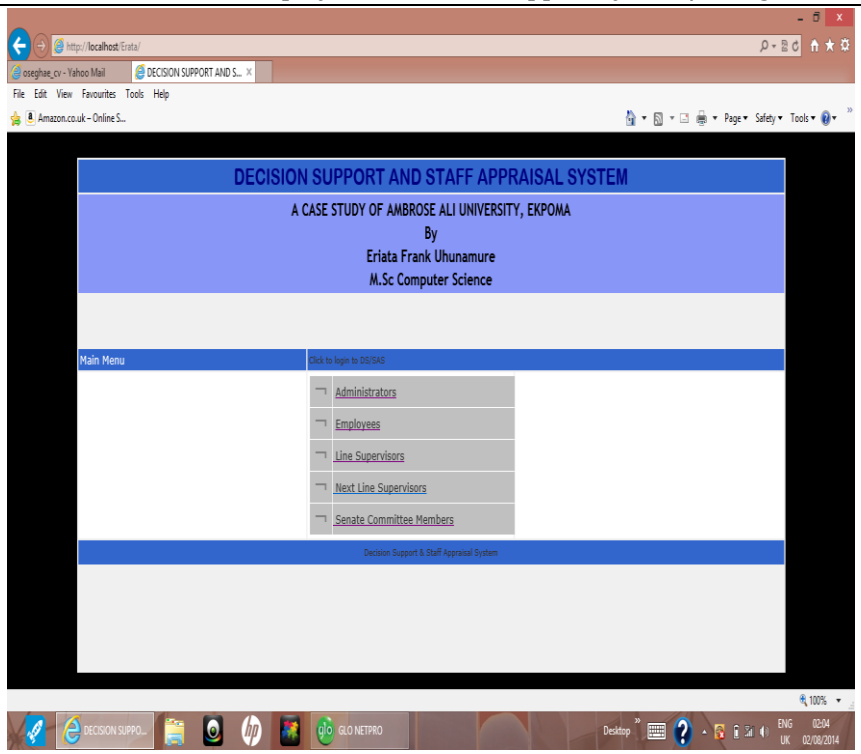

Figure 3: Developed EDSS Main Menu

Figure 3 shows the developed EDSS main menu interface. This is the first interface to be displayed whenever the developed application is lunched. The EDSS application has 5 hyperlinks used by 5 different users and they are as follows: (Administrator, Employees, Line Supervisor1, Next Line Supervisor, and Senate Committee Member).

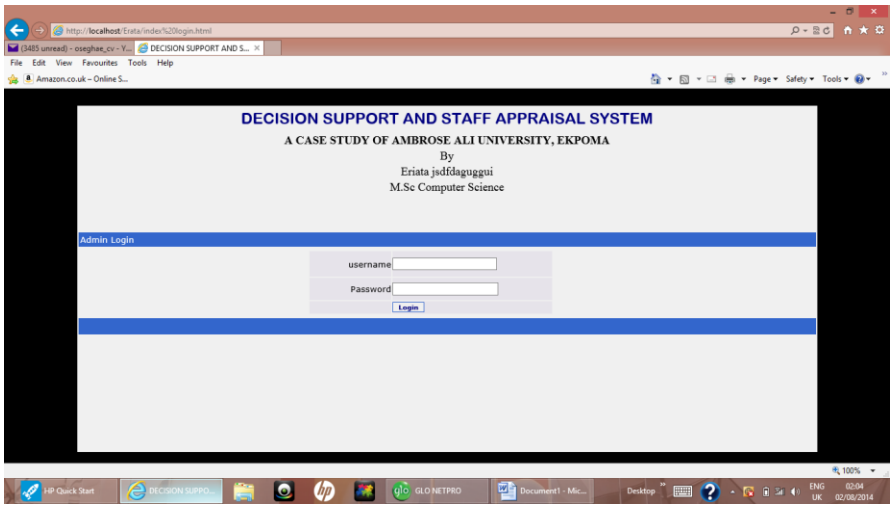

Figure 4: Users Authentication Menu

Figure 4 shows the developed EDSS authentication menu interface. This interface accepts the user's username and password for authentication and verification with the information resident in the authentication database. If it matches the system grants the user access right otherwise user is asked to try again.

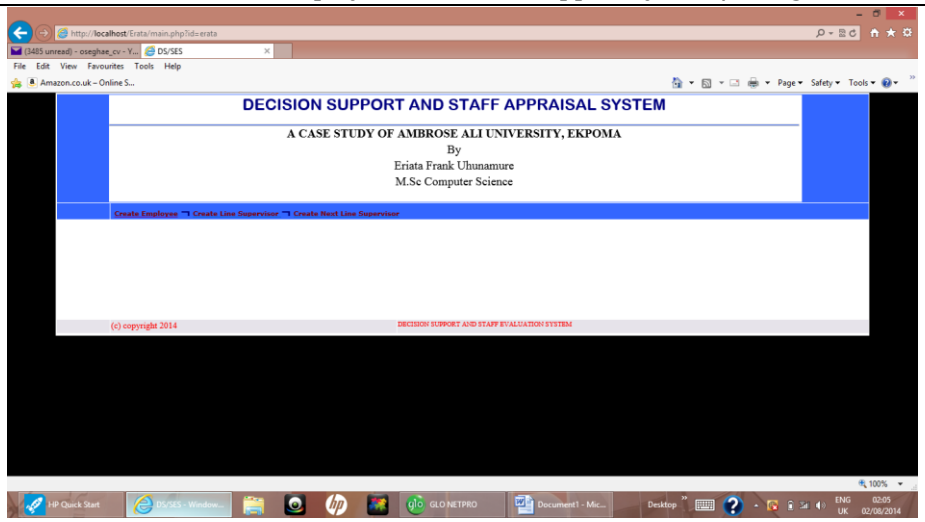

Figure 5: Users Control Panel

Figure 5 shows the developed EDSS users control panel interface. This interface helps the users to perform their various tasks.

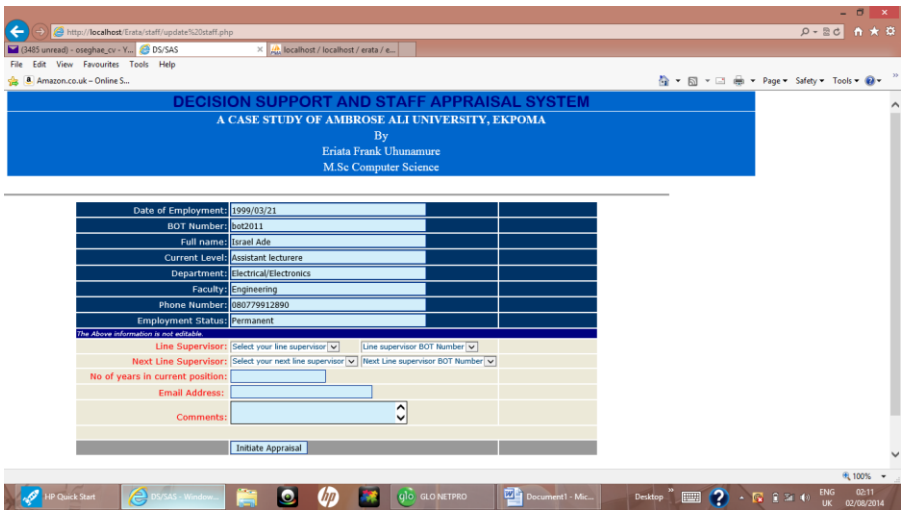

Figure 6: Data Capture Interface (Appraisal Exercise)

Figure 6 shows the developed EDSS input interface. This interface helps the user to capture the required data for appraisal exercise.

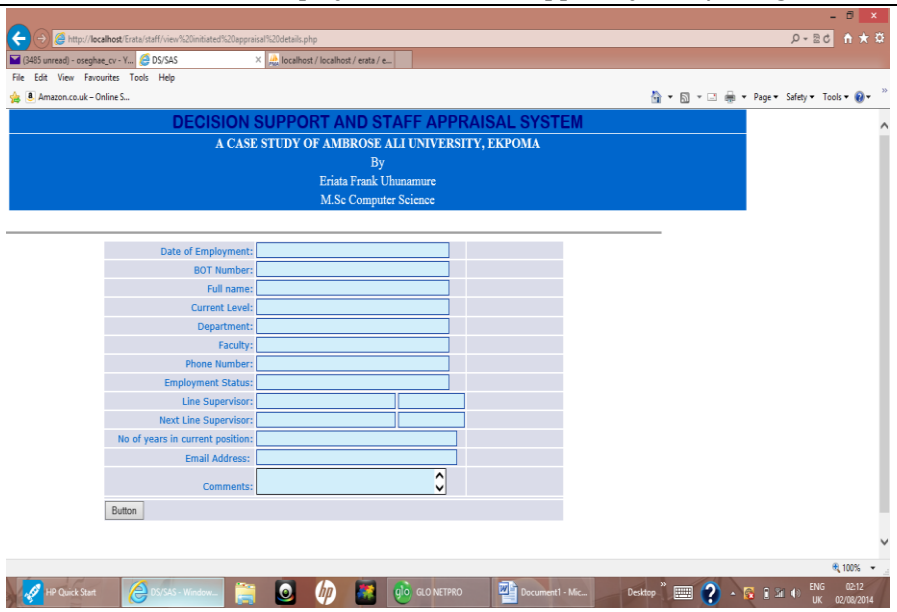

Figure 7: Data Capture Interface (Employee Profile)

Figure 7 shows the developed EDSS input data interface. This interface helps the system administrator user to capture the required data about the various employees.

4.0 CONCLUSION AND RECOMMENDATIONS

The developed Employee Decision Support System (EDSS) serve the University system effectively in terms of operations and planning levels. The benefits of the Employee Decision Support System for the University cannot be over emphasized in terms of decision quality, improved communication, cost reduction, increased productivity and improved employee satisfaction. The EDSS is a new innovation in the University system, and it is therefore recommended to be put into full operations in all Nigerian Universities.

5.0 REFERENCES

[1]. Power, D. J. (2001). Types of Decision Support System and key Web Technologies. Concepts and Resources for Managers on building **DSS.dss**resources.com/**dss**bookstore/**power**02.html

[2]. Power, D. J. (2002). A Brief History of Decision Support Systems, DSSResources.COM, http://DSSResources.COM/history/dsshistory.html, version 2.6, (Current November 19, 2002).

[3]. Peter, K., and Kaparthi, S. (1998). The Changing Technological Context of Decision Support Systems in Context-Sensitive Decision Support Systems. London: Chapman and Hall pub,

[4]. Keen, P. G. W. (1991). Shaping the Future: Business Design Through Information Technology, Boston, MA: Harvard Business School Press.

[5]. Holsapple, C. W and Whinston. A. B. (1996). Decision Support Systems: A Knowledge-Based Approach. St. Paul: West Publishing. ISBN 0-324-03578-0

[6]. Nisha, M. and Priti, S. S. (2013). Need Of Fuzzy Logic For Decision Support System Appraisal (International Journal of Engineering and Innovative Technology (IJEIT) Volume 3, Issue 3, September.

International Journal of Latest Research in Engineering and Technology (IJLRET)
ISSN: 2454-5031(Online)
www.ijlret.com‖ Volume 1 Issue 4‖September 2015 ‖ PP 47-54

Analytical solution of 2D SPL heat conduction model

T. N. Mishra[1]
[1]*(DST-CIMS, BHU, Varanasi, India)*

ABSTRACT : The heat transport at microscale is vital important in the field of micro-technology. In this paper heat transport in a two-dimensional thin plate based on single-phase-lagging (SPL) heat conduction model is investigated. The solution was obtained with the help of superposition techniques and solution structure theorem. The effect of internal heat source on temperature profile is studied by utilizing the solution structure theorem. The whole analysis is presented in dimensionless form. A numerical example of particular interest has been studied and discussed in details.
KEYWORDS – SPL heat conduction model, superposition technique, solution structure theorem, internal heat source

1. INTRODUCTION

Cattaneo [1] and Vernotte [2] removed the deficiency [3]-[6] occurs in the classical heat conduction equation based on Fourier's law and independently proposed a modified version of heat conduction equation by adding a relaxation term to represent the lagging behavior of energy transport within the solid, which takes the form

$$\tau_q \frac{\partial \mathbf{q}}{\partial t} + \mathbf{q} = -k\nabla T \tag{1}$$

where k is the thermal conductivity of medium and τ_q is a material property called the relaxation time. This model characterizes the combined diffusion and wave like behavior of heat conduction and predicts a finite speed

$$c = \left(\frac{k}{\rho c_b \tau_q} \right)^{\frac{1}{2}} \tag{2}$$

for heat propagation [7], where ρ is the density and c_b is the specific heat capacity. This model addresses short time scale effects over a spatial macroscale. Detailed reviews of thermal relaxation in wave theory of heat propagation were performed by Joseph and Preziosi [8], and Ozisik and Tzou [9]. The natural extension of CV model is

$$\mathbf{q}(\mathbf{r}, t+\tau_q) = -k\nabla T(\mathbf{r}, t) \tag{3}$$

which is called the single-phase-lagging (SPL) heat conduction model [10]-[14]. According to SPL heat conduction model, there is a finite built-up time τ_q for onset of heat flux at $\mathbf{r}$, after a temperature gradient is imposed there i.e. τ_q represents the time lag needed to establish the heat flux (the result) when a temperature gradient (the cause) is suddenly imposed.

Due to the complexity of the SPL model, the exact solution can be obtained only for specific initial and boundary conditions. The most popular solution methodology has resorted to either finite-difference or finite-element methods. Only a few simple cases can be solved analytically. In the literature most popular analytical solutions are the method of Laplace transformation [15], Fourier solution technique [16], Green's function solution [17], and the integral equation method by Wu [18] for the solution of the hyperbolic heat conduction equation.

Recently, Lam and Fong [19] and Lam [20] conducted studies by employing the superposition technique along with solution structure theorems for the analysis of the CV hyperbolic heat conduction equation and one dimensional generalized heat conduction model. The temperature profile inside a one-dimensional

region was obtained in the form of a series solution. The method is relatively simple and requires only a basic background in applied mathematics. However, it was noted that solution structure theorems concentrated only on physical problems subjected to homogeneous boundary conditions. It was pointed out that there is a way to solve problems with non-homogeneous boundary conditions by performing appropriate functional transformations, namely by using auxiliary functions.

The purpose of this study is to apply solution structure theorems to study two dimensional SPL heat conduction in a finite plate subjected to homogeneous boundary conditions. The SPL heat conduction equation is solved using the superposition principle in conjunction with solution structure theorems. The outline of the paper is as follows. SPL heat conduction model is given in section 2. Section 3 deals solution of single-phase-lagging heat conduction model. Section 4 contains result and discussion. Conclusion is given in section 6.

2. 2D SPL HEAT CONDUCTION MODEL

The combination of Fourier's law of heat conduction

$$q = -k\frac{\partial T}{\partial y} \tag{4}$$

and law of conservation of energy [21]

$$\rho c_b \frac{\partial T}{\partial t} = -\frac{\partial q}{\partial y} + g^* \tag{5}$$

provides the law of heat conduction as follows

$$\rho c_b \frac{\partial T}{\partial t} = k\nabla^2 T + g^* \tag{6}$$

where g^* denotes the internal energy generation rate per unit volume inside the medium. In two dimension (6) can be written as

$$\rho c_b \frac{\partial T}{\partial t} = k\left(\frac{\partial^2 T}{\partial x^{*2}} + \frac{\partial^2 T}{\partial y^{*2}}\right) + g^* \tag{7}$$

The above (7) is the classical diffusion model which governs thermal energy transport in solids. By introducing dimensionless parameters $\theta = \frac{kcT}{\alpha f_r}, x = \frac{cx^*}{2\alpha}, y = \frac{cy^*}{2\alpha}, F_0 = \left(\frac{c^2}{2\alpha}\right)t$. Equation (7) can be expressed in dimensionless form as

$$2\frac{\partial \theta}{\partial F_0} = \frac{\partial^2 T}{\partial x^2} + \frac{\partial^2 T}{\partial y^2} + g \tag{8}$$

where Fourier number F_0 represents dimensionless time. The CV constitutive relation (1) together with the energy conservation (5) gives the equation governing propagation of thermal energy

$$\frac{\partial T}{\partial t} + \tau_q \frac{\partial^2 T}{\partial t^2} = \alpha\left(\frac{\partial^2 T}{\partial x^{*2}} + \frac{\partial^2 T}{\partial y^{*2}}\right) + \frac{\alpha}{k}\left(g^* + \tau_q \frac{\partial g^*}{\partial t}\right) \tag{9}$$

where α is the thermal diffusivity of the material and the relaxation time $\tau_q = \alpha / c^2$. On the left hand side of above equation, the second order time derivative term indicates that heat propagates as a wave with a characteristic speed given by (2) and the first order time derivative corresponds to a diffusive process, which damps spatially the heat wave. One can see that if energy travels at an infinite propagation speed (i.e. $c \to \infty$), then (9) reduces to the two dimensional parabolic heat conduction equation (based on Fourier law). The (9) can be expressed in dimensionless form as

$$2\frac{\partial \theta}{\partial F_0} + \frac{\partial^2 \theta}{\partial F_0^{\,2}} = \left(\frac{\partial^2 \theta}{\partial x^2} + \frac{\partial^2 \theta}{\partial y^2}\right) + \left(g + \frac{1}{2}\frac{\partial g}{\partial F_0}\right) \tag{10}$$

The above (10) can be written in simplified form as

$$2\frac{\partial\theta}{\partial F_0}+\frac{\partial^2\theta}{\partial F_0^{\,2}}=\left(\frac{\partial^2\theta}{\partial x^2}+\frac{\partial^2\theta}{\partial y^2}\right)+G \tag{11}$$

In present study, an isotropic thin plate, $0\le x, y\le 1,$ with uniform thickness and constant thermo-physical properties, is assumed. Initially, the thin plate is at temperature $\theta(x,y,0)=\theta_2,$ which is a function of positions within the thin plate and rate of change in temperature is θ_3. For time $F_0>0,$ the following boundary conditions will be considered

$$\theta(x,y,0)=\theta_2,\frac{\partial\theta(x,y,0)}{\partial F_0}=\theta_3 \tag{12}$$

$$\theta(0,y,F_0)=0,\theta(1,y,F_0)=0 \tag{13}$$

$$\theta(x,0,F_0)=0,\theta(x,1,F_0)=0 \tag{14}$$

3. SOLUTION

The superposition technique can be applied to solve linear heat transfer problem with non-homogeneous term [7, 22, 23]. With the application of superposition principle, the original problem (11) can be divided into three sub-problems by setting initial conditions and $\left(G(x,y,F_0)\right)$ as (1) $G=\theta_2=0,$ (2) $G=\theta_3=0,$ and (3) $\theta_2=\theta_3=0$. Solution to these sub-problems is designated as S_1, S_2, S_3. Therefore, the general solution of the original hyperbolic SPL heat conduction model is $S=S_1+S_2+S_3$.

3.1. Solution Structure Theorem

With the help of solution structure theorem [7], once the solution of sub-problem (1) is known, solution of sub-problems (2) and (3) can be obtained as follows

$$S_2=\left(2+\frac{\partial}{\partial F_0}\right)\mathrm{F}\left(x,y,F_0,\theta_2\right)+B\mathrm{F}\left(x,y,F_0,\lambda_{m,n}\theta_2\right)$$

$$S_3=\int_0^{F_0}\mathrm{F}\left(x,y,F_0-\tau,G(x,y,\tau)\right)d\tau$$

where $\mathrm{F}\left(x,y,F_0,\theta_3\right)$ be the solution of sub-problem (1).

3.2. Solution of 2D-SPL Heat Conduction Model

This section only devoted to the solution of the sub-problem (1) of SPL heat conduction model. For the given initial and boundary conditions, one can write solution to the governing equation by using Fourier series as

$$\theta(x,y,F_0)=\sum_{m,n}^{\infty}\theta_{m,n}(F_0)Cos(\lambda_m x)Cos(\lambda_n y) \tag{15}$$

By substituting above (15) into (11) and after some manipulation we get following

$$\frac{\partial^2\theta_{m,n}}{\partial F_0^2}+2\frac{\partial\theta_{m,n}}{\partial F_0}+\lambda_{m,n}\theta_{m,n}=0 \tag{16}$$

The Solution of above takes the form

$$\theta_{m,n}(F_0)=e^{\alpha_{m,n}F_0}\left\{a_{m,n}Sin(\beta_{m,n}F_0)+b_{m,n}Cos(\beta_{m,n}F_0)\right\} \tag{17}$$

where $\alpha_{m,n}$ and $\beta_{m,n}$ are defined as follows

$$\alpha_{m,n}=-1,\beta_{m,n}=\sqrt{\lambda_{m,n}-1},\ \lambda_{m,n}=\lambda_m^2+\lambda_n^2;\lambda_m=m\pi,\lambda_n=n\pi\,.$$

By substituting above (17) into (15) solution of the sub-problem (1) can be expressed as follows

$$S_1 \equiv \theta(x,y,F_0) = \sum_{m,n}^{\infty} e^{\alpha_{m,n}F_0} \left\{ a_{m,n} Sin(\beta_{m,n}F_0) + b_{m,n} Cos(\beta_{m,n}F_0) \right\} \times Cos(\lambda_m x) Cos(\lambda_n y) \qquad (18)$$

Now to find the coefficients $a_{m,n}$ and $b_{m,n}$ we consider initial conditions $\theta_2 = 0,$ then $b_{m,n} = 0$ and $a_{m,n}$ may be obtained as

$$a_{m,n} = \frac{2}{\beta_{m,n}} \int_0^1 \int_0^1 \theta_3 Cos(\lambda_m x) Cos(\lambda_n y) dxdy .$$

Hence the solution of the problem is complete for $m, n > 0$. Since the solution contains *Cosine* terms at the end of (18), therefore for $m, n = 0$ there is also a solution of the problem. For $m, n = 0$, (16) becomes

$$\frac{\partial^2 \theta_0}{\partial F_0^2} + 2\frac{\partial \theta_0}{\partial F_0} = 0$$

With the application of initial conditions, solution of above is

$$\theta_0(x,y,F_0) = \frac{1}{2}(1 - e^{-2F_0})\theta_3 \qquad (19)$$

Thus the final solution of the two dimensional SPL heat conduction model is

$$\theta(x,y,F_0) = \theta_{m,n}(x,y,F_0) + \theta_0(x,y,F_0) = \frac{1}{2}(1 - e^{-F_0})\theta_3 + 2 \times$$

$$\sum_{m,n=1}^{\infty} \frac{e^{\alpha_{m,n}F_0}}{\beta_{m,n}} \int_0^1 \int_0^1 \theta_3(\xi,\psi) Cos(\lambda_m \xi) Cos(\lambda_n \psi) d\xi d\psi Sin(\beta_{m,n}F_0) Cos(\lambda_m x) Cos(\lambda_n y) \qquad (20)$$

4. RESULTS AND DISCUSSION

This section presents complete solution of two dimensional SPL heat conduction model under different initial and boundary conditions. By utilizing the solution structure theorem, the effect of internal heat source on temperature profile has been studied and is given in case 2. The figures presented in this study, only the parameters whose values different from the reference value are indicated.

Case 1: $\theta_2 = 0, \theta_3 = Sin(xy), G = 0$.

In this case in the absence of internal heat source, effect of Fourier number has been observed. Figs. 1-2 present the spatial temperature profile for two Fourier number $F_0 = 0.5$ and 1.0. The dimensionless temperature firstly increases with F_0 as Fourier number is a measure of rate of heat conduction with the heat storage in a given volume element. Larger the Fourier number, deeper is the penetration of heat into the body over a given period of time.

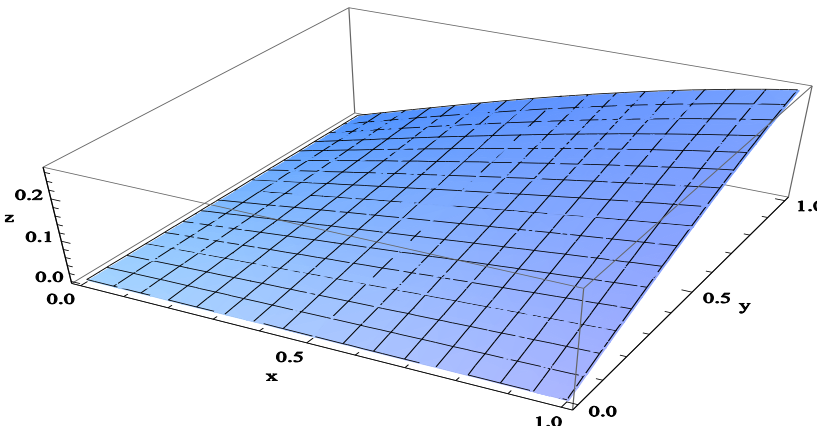

Fig. 1 Spatial temperature profile at $F_0 = 0.5$.

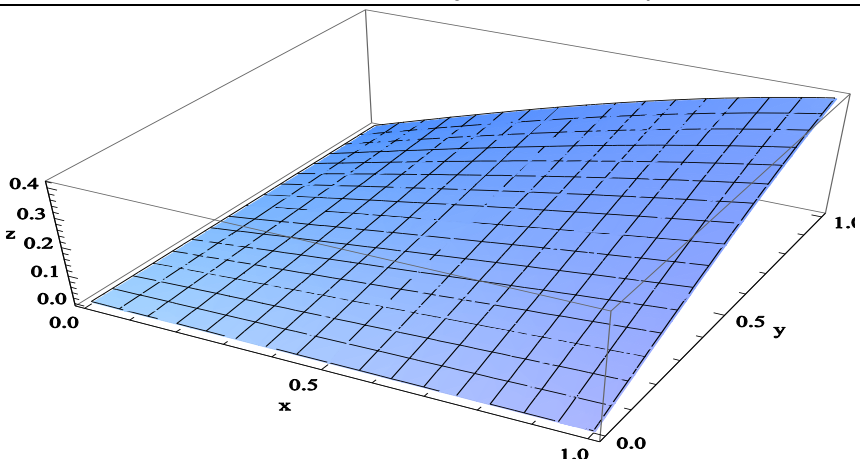

Fig. 2 Spatial temperature profile at $F_0 = 2.0$.

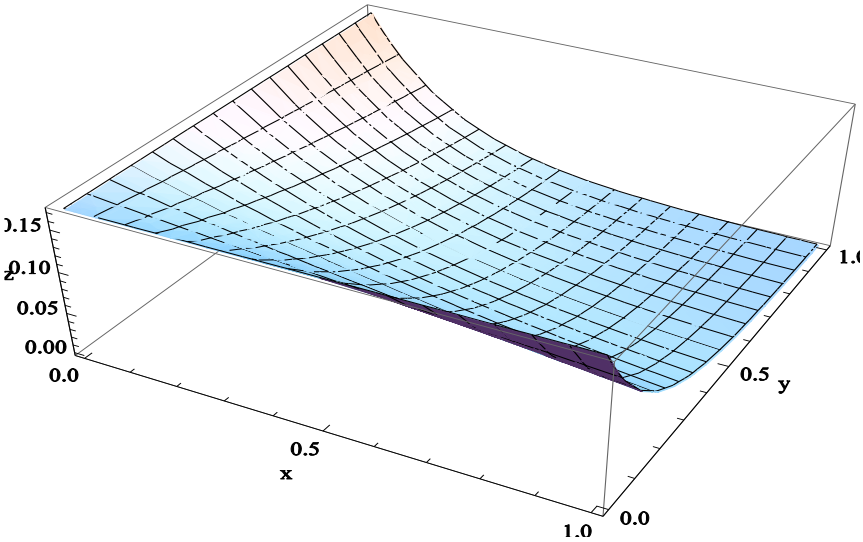

Fig. 3 Spatial temperature profile at $F_0 = 1.0, \delta = 0.5, \mu = 5$.

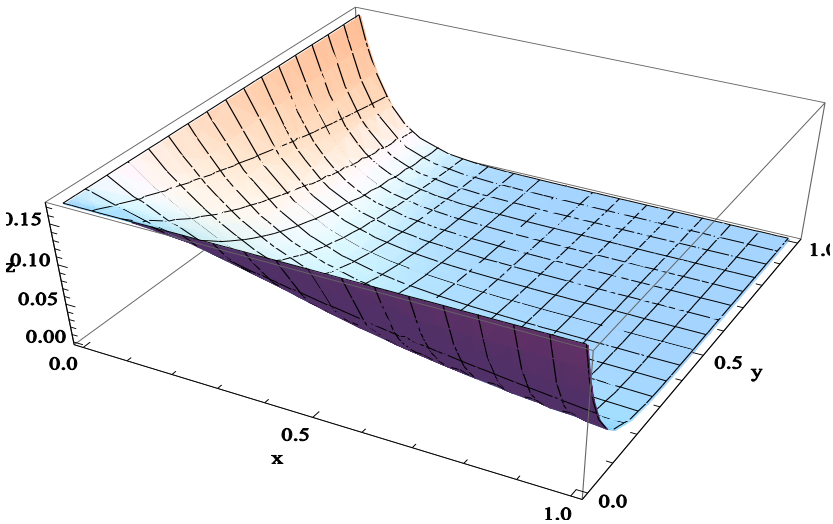

Fig. 4 Spatial temperature profile at $F_0 = 1.0, \delta = 0.5, \mu = 15$.

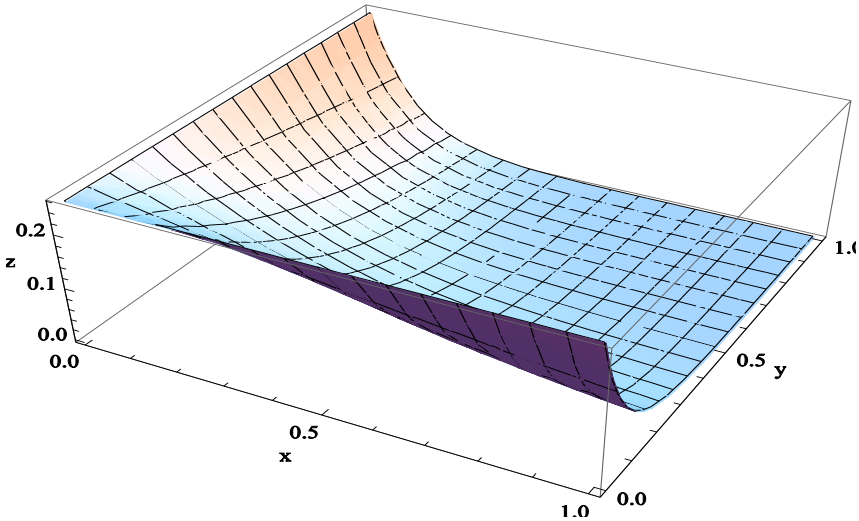

Fig. 5 Spatial temperature profile at $F_0 = 1.0, \mu = 10, \delta = 0.1$.

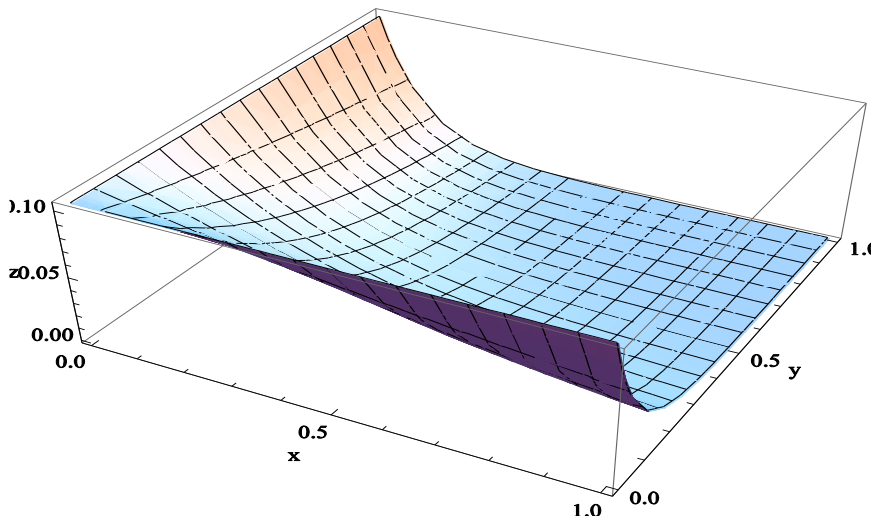

Fig. 6 Spatial temperature profile at $F_0 = 1.0, \mu = 10, \delta = 1.0$.

<u>Case 2:</u> $\theta_2 = 0, \theta_3 = 0, G = e^{-\mu xy} - e^{-\delta F_0}$.

This case is devoted to the effect of internal heat source on the temperature profile. Heat source is modelled as time varying and spatially decaying. The spatial temperature profile for various absorption coefficients (μ) at fixed Fourier number $F_0 = 1.0$ and laser pulse fall-time $(\delta) = 0.5$ is given in Figs. 3-4. Due to the spatially decaying nature of heat source, if we move towards end of both the spatial direction of thin plate, then the amount of heat entered into the body decreases and hence dimensionless temperature decreases with increase of absorption coefficient, as shown in Figs. 3-4.

Figs. 5-6 present the effect of laser pulse fall-time on spatial temperature profile at fixed absorption coefficient and Fourier number. For fixed Fourier number, as laser pulse fall-time increases the amount of heat entered into the body decreases, due to which dimensional temperature into the body decreases.

5. CONCLUSION

The mathematical model describing heat transfer in a thin plate based on single-phase-lagging heat conduction is solved by superposition technique. The solution was obtained by utilizing superposition technique, structure theorem and Fourier series expansion. The effect of Fourier number, absorption coefficient and laser

pulse fall time parameter on temperature profile has been observed. The temperature increases with increase of Fourier number and laser pulse fall time parameter but decreases with absorption coefficient.

This technique is very applicable for solving non-homogeneous partial differential equation under most generalized boundary conditions and may be applicable for solving the higher dimensional SPL heat conduction model of general body.

6. NOMENCLATURE

c	Thermal wave propagation speed (m/s)
c_b	Specific heat capacity $(J/kg.K)$
f_r	Reference heat flux $(\mathbf{q}/\mathbf{q}^*)$
F_0	Fourier number $(c^2t/2\alpha)$
g^*	Internal heat source (W/m^3)
g	Dimensionless heat source $(4\alpha g^*/cf_r)$
k	Thermal conductivity $(W/m.K)$
$\mathbf{q}^*$	Dimensionless heat flux $(\mathbf{q}/f_r)$
$\mathbf{r}$	Position vector
t	Time (s)
T	Temperature (K)
ΔT	Temperature gradient (K/m)
x^*	Spatial coordinate (m)
x	Dimensionless spatial coordinate $(cx^*/2\alpha)$
y^*	Dimensionless spatial coordinate $(cy^*/2\alpha)$
y	Spatial coordinate (m)
α	Thermal diffusivity (m^2/s)
δ^*	Thermal diffusivity $(1/s)$
δ	Dimensionless laser pulse fall-time parameter $(2\tau_q\delta^*)$
θ	Dimensionless Temperature $(kcT/\alpha f_r)$
μ^*	Thermal diffusivity $(1/m)$
μ	Dimensionless absorption coefficient $(2c\tau_q\mu^*)$
ρ	Density (kg/m^3)
τ_q	Phase-lag of heat flux (s)

7. Acknowledgement

Author is thankful to DST-CIMS, BHU for providing necessary facilities during the manuscript.

REFERENCES

[1] C. Cattaneo, Sur une forme de I'Equation de la chaleur elinant le paradox d'une propagation instantance, C. R. Acad. Sci. 247, 1958, 431-433.

[2] M.P. Vernotte, Les paradoxes de la theorie continue de I' equation de la chleur, C. R. Acad. Sci., 246, 1958, 3154-3155.

[3] D.Y. Tzou, Macro-to-microscale heat transfer: the lagging behavior (Washington: Taylor & Francis, 1996).

[4] D.G. Cahill, W.K. Ford, K.E. Goodson, G.D. Mahan, A. Majumdar, H.J. Maris, R. Merlin, and S.R. Phillpot, Nanoscale thermal transport, J. Appl. Phys., 93, 2003, 793-818.

[5] A.A. Joshi, and A. Majumdar, Transient ballistic and diffusive phonon heat transport in thin films, J. Appl. Phys., 74, 1993, 31-39.

[6] C.L. Tien, A. Majumdar, and F.M. Gerner, Microscale energy transport (Washington: Taylor & Francis, 1998).

[7] L.Q. Wang, Xu Zhou, and X. Wei, Heat conduction: mathematical models and analytical solutions (Berlin: Springer-Verlag, 2008).

[8] D.D. Joseph, and L. Preziosi, Heat waves, Rev. Mod. Phys., 61, 1989, 41-73.

[9] M.N. Ozisik, and D.Y. Tzou, On the wave theory in heat conduction, ASME J. Heat Transfer, 116(3), 1994, 526-535.

[10] D.Y. Tzou, Thermal shock phenomena under high rate response in solids, Annual Review of Heat Transfer, 4, 1992, 111-185.

[11] D.Y. Tzou, Shock wave formation around a moving heat in a solid with finite speed of heat propagation, Int. J. Heat Mass Transfer, 32, 1989, 1979-1987.
[12] D.Y. Tzou, Thermal shock wave induced by a moving crack, ASME J. Heat Transfer, 112, 1990, 21-27.
[13] D.Y. Tzou, Thermal shock waves induced by a moving crack-a heat flux formulation, Int. J. Heat Mass Transfer, 33, 1990, 877-885.
[14] D.Y. Tzou, On thermal shock waves induced by a moving heat source, ASME J. Heat Transfer, 111, 1989, 232-238.
[15] G.F. Carey, and M. Tsai, Hyperbolic heat transfer with reflection, Numerical Heat Transfer, 5, 1982, 309-327
[16] A. Moosaie, Non-Fourier heat conduction in a finite medium subjected to arbitrary non-periodic surface disturbance, Int. Communication Heat Mass Transfer, 35, 2008, 376-383
[17] M.N. Ozisik, and B. Vick, Propagation and reflection of thermal waves in a finite medium. Int. J Heat Mass Transfer, 27(10), 1984, 1845-1854
[18] C.Y. Wu, Integral equation solution for hyperbolic heat conduction with surface radiation. Int. Communication Heat Mass Transfer,15, 1988, 365-374
[19] T.T. Lam, and E. Fong, Application of solution structure theorems to non-Fourier heat conduction problems: analytical approach, Int. J. Heat Mass Transfer, 54(23-24), 2011, 4796-4806.
[20] T.T. Lam, A unified solution of several heat conduction models, Int. J. Heat Mass Transfer, 56, 2013, 653-666.
[21] M.N. Ozisik, Heat conduction (New York: John Wiley & Sons, 1993).
[22] L.Q. Wang, Solution structure theorem of hyperbolic heat conduction equation, Int. J. Heat Mass Transfer, 43(21), 2000, 365-373.
[23] L. Wang, M. Xu, and X. Zhou, Well-posedness and solution structure theorem of dual-phase-lagging heat conduction, Int. J. Heat Mass Transfer, 44, 2001, 1659-1669.

International Journal of Latest Research in Engineering and Technology (IJLRET)
ISSN: 2454-5031(Online)
www.ijlret.com‖ Volume 1 Issue 4‖September 2015 ‖ PP 55-58

Comparison of Mechanical Properties of Al-5%Si Alloy Reinforced with Cow dung ash and Rice husk ash

Jyothi P N[1], Bharath Kumar B S[2]
[1]*(Associate Professor, Department of Mechanical Engineering, K.S.School of Engineering and Management, Bangalore, 560062, India)*
[2]*(Student, Department of Mechanical Engineering, K.S.School of Engineering and Management, Bangalore, 560062, India)*

ABSTRACT: To satisfy the global need of material with reduced weight, high strength, low cost, research in the field of materials has shifted from monolithic to composite materials. The present work discusses thedevelopment of a newer metal matrix composite material using Al-5%Si alloy as base material and reinforcing it with cow dung and ricehusk ash. Both the ashes are added separately with the varying volume percentageof 2%, 4% and 6 % and fabricated using stir casting process. Microstructure and Hardness of the fabricated composite are beenStudied and compared.
KEY WORDS: Cow dung ash,hypoeutectic aluminum silicon alloy,MMC, Mechanical properties, Rice husk Ash.

I. INTRODUCTION

InAutomotive industries, aluminum based alloys and its MMCs are widely used mainly due to its low weight leading to low fuel consumption. Aluminumbased MMCs are gaining huge industrial significance because of theiroutstanding combination of mechanical, physical and Tribological properties over thebase alloys. These properties include high specific strength, high wear and highstiffness, better high temperature strength, controlled thermal expansion coefficient and improved damping capacity. In recent years, interest to carry out research is in the field of MMCs is focused on use of low density and low cost reinforcements. Many reinforcements like SiC, Al_2O_3, glass,graphite, fly ash, rice husk ash etc., are commonly used.Butrice husk ash [1-3] is one of the solid waste byproduct obtained as a residue from the rice mill, whichhas lowdensity, isinexpensive and available in large quantities. Therefore Rice husk ash is utilized as most economical reinforcement.Many researchers have worked using RHA as reinforcement varying the volume of particulate added as well as the size of the particulate. Al based MMCs are been fabricated using powder metallurgy technique [4], stir casting [5], squeeze casting [6] etc. The economical route for producing aluminum based MMCs is stir casting method. But the main problem in stir casting process is non-uniform mixing and distribution of the reinforcement particles in the matrix, and this is due to reduced wettability of the reinforcing particles with the melt and this can be overcome by adding Mg powder during the process. In the present work cow dung ash (CWA) and Rice husk ash (RHA) is used as reinforcements for Al-5%Si alloy base material. Stir casting technique is used for fabricating the MMCs. From literature it is seen that, using RHA as reinforcement enhances the Mechanical properties [7], wear[8]and corrosion resistance [9].

Purpose of using Cow dung ash as reinforcement material

Earlier in olden days, cow dung wascaked and dried and theobtained solid was used as fuel. Dung is used to produce biogas which can be further used to generate electricity and heat. Recently Cow dung is used to manufacture of adobe mud brick housing and in cold places, cow dung is used to line the walls of rustic houses as a cheap thermal insulator. In this work an effort has been made to explore the advantage of using CWA as reinforcement on the mechanical properties of Al-5%Si based MMCs and obtained results are been compared with the properties of Al-5%Si alloy reinforced with RHA.

II. EXPERIMENTAL DETAILS

The base material, Al-Si alloy with 5%Si is prepared by melting commercially pure aluminum (99.7%) and commercially pure silicon (99.5%) in a graphite crucible in a high frequency induction furnace and the melt was held at 720 °C in order to attain homogeneous composition. After degassing with 1% solid hexachloroethane, 0.1% Al-Ti master alloy was added to the melt for modification of microstructure. Melt was stirred for 30s after the addition of the modifier, held for 5 min and then poured into a cubical graphite mould surrounded by fireclay bricks. The raw cow dung and rice husk were bought and burned with help of kerosene for complete combustion

and after the combustion ashes were collected in a polythene cover. The base material and the RHA and CWA used in the work are shown in the Fig.1.

(a) (b) (c)

Figure.1 (a) Al-5%Si base material (b) Rice husk ash (c) Cow dung ash

Cow dung ash is filtered with the help swirling machine and grain sizes of 300- 800 microns were collected. Ashes were given to the chemical analysis to get the chemical composition. The chemical composition of Cow dung and Rice husk ashes is given below in the table 1

Table 1 Chemical composition of Cow dung and Rice husk ash

Compound/element (constituent)	RHA wt.%	CWAwt. %
Silica (SiO_2)	94.04	69.65
Aluminum oxide (Al_2O_3)	0.249	4.27
Calcium oxide(CaO)	0.622	12.55
Magnesium oxide(MgO)	0.442	2.22
Potassium oxide (K_2O)	2.49	2.94
Hematite(Fe_2O_3)	0.21	-
Silver (Ag)	trace	-

The stir casting machine and electric induction furnace used for fabricating the MMCs is shown in the Fig. 2.maximum temperature of the furnace is 1500^0c and graphite crucible of capacity of 1.5 kg is used for melting

Figure 2 Stir casting setup with furnace

During melting 800^0c was maintained as super heat temperature, once the temperature is reached and maintained the slag is removed with the help of slag remover.Stirrer is then adjusted for stirring action.Stirrer is then switched on and set for a required speed.Cow dung and Rice husk ashes is added individually at varying percentage of 2%, 4%, 6% to get six testing samples. Later allowed for stirring action to complete 30-45sec approx. Magnesium is added to increase the wettability of a molten metal and to get uniform distribution of ash.After 30-45sec of stirring action, stirrer is switched off and stirrer is removed from the crucible, and molten metal is poured to metal mould and allowed it to cool under normal atmospheric air.From the cast obtained,test specimens to carry out wear, microstructural studies, measuring hardness, tensile strength are prepared using ASTM standards.

III. RESULTS AND DISCUSSIONS

3.1 MICROSTRUCTURE

The microstructure of the composite after casting was examined to study the effect of Rice husk and cow dung ash with varying percentage on polished section of each sample. The specimens were prepared for metallographic examinations using emery papers varying from 220 to 3000 grit followed by polishing with diamond paste.

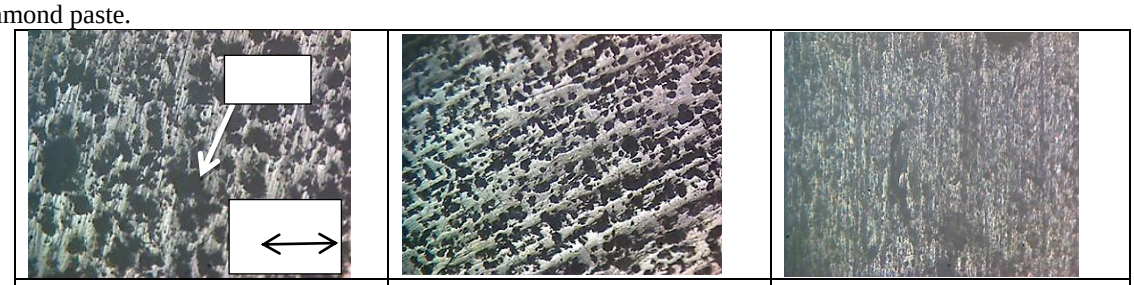

(a) 2%RHA (b)4%RHA (C) 6%RHA

Figure 3 Microstructure of Al+5%Si with rice husk ash

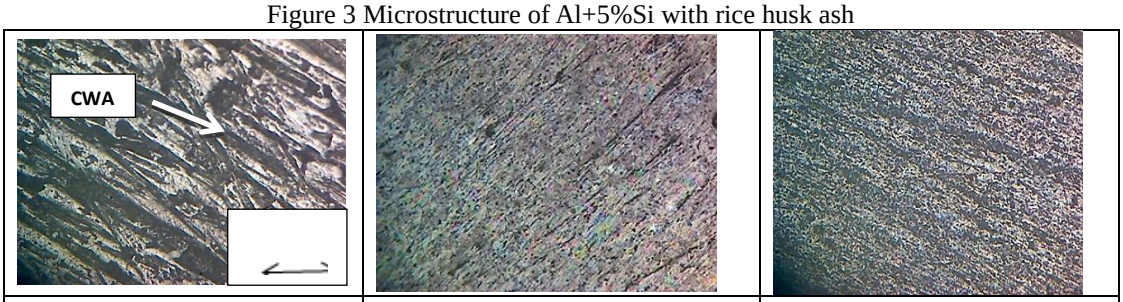

(a) 2%CWA (b) 4%CWA (c) 6%CWA

Figure 4 Microstructure of Al+5%Si with cow dung ash

From the Fig. 3 and Fig. 4, it can be seen that there is good dispersion of the particulates in the Al-5%Si base material and reinforced particulates of RHA and CWA particulates are visible respectively. From Fig. (b) and Fig. (c), it can be seen that volume of particulates increases as the percentage of addition increases from 2% to 4% and 6%. Comparing the microstructure in Fig. 3(a) and 4 (a), it is seen that RHA is more granular in shape compared to CWA and since density of CWA (1000kg/m^3) is less than RHA(1063kg/m^3),maximum quantity of the ash is seen on the top surface of the specimen.

3.2 HARDNESS MEASUREMENT

Hardness measurement was carried out using a Vickers hardness tester. Before testing, specimen surfaces were polished using emery papers of 1000 mesh. Two reading was taken on horizontal surface of the specimen and two on the vertical surface. The results obtained for Al+5% Si alloy with varying percentage of rice husk ash is shown in Fig.5 and for Al+5% Si alloy with varying percentage of cowdung ash is shown in Fig. 6.Hardness values are almost same on the horizontal and vertical surface indicating that mixing of reinforcement with base melt is uniform. For RHA maximum hardness is seen in 6% reinforcement compared with 2% and 4%, this may be due to high percentage of SiO_2 present in the ash. But with CWA reinforced specimen, hardness Value is maximum at 2% reinforcement; even though the porosity is high 84.3%,this indicates that cow dung ash can be used for metal foaming. CWA can be used for making metal foam as it reduces the density at the same time gives better mechanical properties as it can be seen with the higher hardness values.

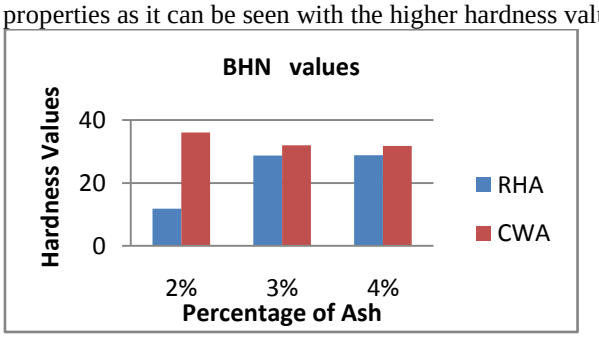

Figure 5 BHN values for RHA and CWA along the horizontal surface

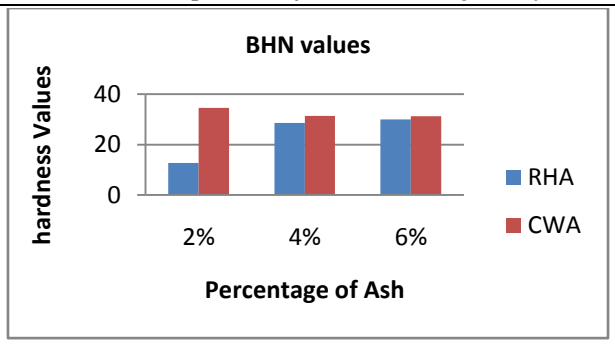

Figure 6 BHN values for RHA and CWA along the Vertical surface

IV. CONCLUSION

From past research work, it is observed that different types of ashes can be successfully used as reinforcement material in making of MMCs. In the present work two types of ashes are been used i.e. Rice Husk Ash(RHA) and Cow Dung Ash(CWA) as reinforcement material with base material as Al+5%Si alloy and following results can be concluded .

- Hardness value obtained for CWA reinforced specimen is higher than that of specimen reinforced with RHA. So CWA is a better reinforcement material than RHA.
- With 2% CWA, hardness value and porosity percentage is high compared with other specimen
- Specimen reinforced with 2% CWA showed better hardness value with higher porosity level, so this can be used for metal foaming, as it reduces the density with better mechanical properties.

REFERENCE

[1]. Sathy Chandrasekhar, P. N. Pramada ,JishaMajeed, "Effect of calcination temperature and heating rate on the optical properties and reactivity of rice husk ash", J Mater Sci. (2006) 41:7926–7933.

[2]. P. Mishra, A. Chakraverty, H. D. Banerjee, "Production and purification of silicon by calcium reduction of rice-husk white ash", Journal of Materials Science 20 (1985) 4387 4391

[3]. UbollukRattanasak, PrinyaChindaprasirt, and PrasertSuwanvitaya, "Development of high volume rice husk ash alumino silicate composites", International Journal of Minerals, Metallurgy and Materials Volume 17, Number 5, October 2010, Page 654

[4]. S.M. Zebarjad, S.A. Sajjadi, "Dependencyphysical and mechanical properties of mechanical alloyed Al-Al2O3 composite on milling time", Materials and Design 28, pp. 2113–2120, 2006

[5]. K. V. Mahendra and K. Radhakrishna, "Castable composites and their application in automobiles", Journal of Automobile Engineering, pp. 135-140,2007

[6]. Yu Xiao-dong, Wang Yang- wei, WANG Fu-chi, "Effect of particle size on mechanical properties ofSiCp/5210 Al metal matrix composite", Transaction of Nonferrous Metal Society of China, 17, pp. s276-s279,2007

[7]. BasavarajMathpathi, Bharat S Kodli, "A Study on Mechanical Properties of Aluminum, Rice Husk and Silicon Carbide Matrix Composites",IJSRD - International Journal for Scientific Research & Development| Vol. 2, Issue 08, 2014 | ISSN (online): 2321-0613

[8]. S. D. Saravanan, M. Senthilkumar, S. Shankar "Effect of Particle Size on Tribological Behavior of Rice Husk Ash–Reinforced Aluminum Alloy (AlSi10Mg) Matrix Composites", Tribology Transactions, Volume 56, Issue 6,pages 1156-1167,2013

[9]. K. K Alaneme,PeterApataOlubambi, "Corrosion and wear behaviour of rice husk ash—Alumina reinforced Al–Mg–Si alloy matrix hybrid composites", Technology, Volume, , Pages 188–194, April–June 2013

International Journal of Latest Research in Engineering and Technology (IJLRET)
ISSN: 2454-5031(Online)
www.ijlret.com‖ Volume 1 Issue 4‖September 2015 ‖ PP 59-64

Evaluation of the factors affecting housing maintenance and its probable solutions

Ajetomobi Oludare Olayinka and Olanrewaju Sharafadeen Babatunde Owolabi
Department of Building Technology, The Federal Polytechnic, Ado-Ekiti, Ekiti State, Nigeria

Abstract: This paper aimed at the evaluation of the factors that are affecting the housing maintenance and its probable solutions to the public and private housing facilities in Nigeria. Data for the study were collected through well-structured questionnaire directed to construction professionals in the construction firm and government ministries. Data collected were analysed using frequency distribution table and relative significance index. The study revealed thatDesign and proper workmanshipranked first with an RSI value of 0.9338, material specifications ranked second with RSI value of 0.847 and construction supervision ranked third with an RSI value of 0.827. These are followed by detailing of working drawings (0.813). The common solution to the housing maintenance is the monitoring and documentation of corrective actions, project expenditures, and accomplishments. This solution was ranked first with an RSI value of 0.880. Provision of accurate data for maintenance and construction programme decision making ranked second with an RSI value of 0.833. The study recommended that theBuilding professionals should participate in design and proper workmanship,building materials to be used for construction must be strictly adhere to its specifications and there must be adequate construction supervision and detailing of working drawings,

I. Introduction

It is important to understand the term "housing and maintenance" before discussing the issue of housing maintenance in depth. Encarta Dictionaries (2009) defined housing as an accommodation such as houses or other buildings where people live, considered collectively and also Encarta Dictionaries (2009) defined maintenance as a continuous repair work i.e. work that is done regularly to keep a machine, building, or piece of equipment in good condition and work order.

Maintenance is defined by British Standards Institution, BS 3811 (1974), as a combination of any action carried out to retain an item in , or restore it to, an acceptable condition. Akintomiwa (2010) put it as the act of controlling the use (exploitation), presering the performance standards, qualities and lifespan of property with a view at perpetuating its full capacity benefits.

Housing maintenance in Nigeria has suffered from lack of funds for a considerable time. While the requirements for good practice in maintenance management of building stock have been established over a considerable period, the achievement of good practice is by no means universal.Maintenance of the built environment impacts on the whole nation. According to Iyagba (2005), it is impossible to produce buildings which are maintenance free, but maitenance work can be minimised by good design and proper workmanship carried out by skilled experts or competent craftsmen using suitable codes of installation, requisite building materials and methods.

Housing is paramount to human existence as it ranks among the top three needs of man. Its provision has always been of great necessity to man. As a unit of the environment housing has profound influence on the health, efficiency, social behaviour, satisfaction and general welfare of the community. Bala Kabir and S.A. Bastani, in their review of housing delivery efforts in Nigeria, defined housing as buildings or other shelters in which people live, a place to live, a dwelling. Olotuah (2000) said that housing is a reflection of the cultural, social and economic values of a society and one of the best historical evidences of the civilization of a country. The provision of adequate housing in any country is very vital as housing is a stimulant of the national economy. Housing is a set of durable assets, which accounts for a high proportion of a country's wealth and on which households spend a substantial part of their income. It is for these reasons that housing has become a regular feature in economic, social and political debates often with highly charged emotional contents(Agbola, 1998).In Nigeria, like in many other developing nations of the world housing maintenance problems are multi dimensional. The problems of population explosion, continuous influx of people from the rural to the urban centres, lack of maintenance culture and the lack of basic infrastructure required for good standard of living have compounded housing maintenance problems over the years. Access to this basic need by the poor who

constitute the largest percentage of the world population has remained a mirage and it needs to be critically addressed.

2.0 Literature Review

Housing has been universaaly acknowledged as one of the most essential necessities of human life and is a major economic asset in every nation. Adequate housing provides the foundayion for stable communities and social inclusion (Bala, 2012). Since independence, the Nigerian nation has desperately continued to make concerted efforts in the area of quantitative supply of housing (though still far from the target) through huge budgetary and polity provisions, but surprisingly, the area of maintenance of the existing stock has suffered inexplicable neglect. Wahab et al (1990) asserted that two-thirds of urban housing are varying degress of serious disrepair.. Of these, a third is not fit for safe habitation as they are either dilapidated or in need of major repairs. Ogieto (1987) has observed that the disparity between the price and quanlity of materials to be use for housing maintenance on the one hand, and the number of households and the money available to them to pay these prices on the other, constitutes the central problem of housing maintenance. The gap between income, shelter cost and the housing maintenance in Nigeria is very wide (Okupe and Windapo ,2000). This has almost eliminated the low-income earners from the housing maintenance.

The overall cost of a unit of housing in any building development includes the cost of providing land, infrastructure such as roads and essential service such as water and electricity. The cost of construction materials and labour constitutes major part of the total cost of the house. The building design process is defined as that through which the Architect and the Builder identify space allocation.

It has also been established that traditional Africa settlement, exhibit a refined form of house type and community structure which is mostly determined by the interaction of culture such as linage or kinship pattern of the community, climate, economy or natural resources of the area. Wahab (2007) also observed that the tropical climate in Nigeria affects not only the patterns of daily life, the planning of settlement and forms of building but also determines the types of materials which could be used for the construction of the building.Building design consideration for the south-western Nigeria should take into account provision for adequate air movement for effective body cooling. This is due to the climate is warm and humid.

Adetomiwa (2010) identified many factors that have been responsible for housing or building deterioration individually or collectively among them are design and proper workmanship, materials specifications, detailing of working drawings, construction supervision, cash flow analysis, environmental factors, users activities, shifting values and modernization, accidents and solar radiation. Other factors may include ageing, wear and tear, preservation of historic buildings, value of buildings, alteration and modifications, inadequate housing stock, low quality of original construction, harsh climatic effects, mixed and changing patterns of building uses, declining quality of building materials and social factors.Sanni (2010) stressed the need for the development of appropriate policies especially in the context of national development in Nigeria.

It is widely believed that the number of construction projects going on in a nation at a particular time is a measure of the development activities of that nation and residential buildings constitute about 70%-100% of the products of the building industry (Chudley, 1987). For a decision to develop a large number of construction projects including housing units, many development activities must be completed. Product of the buildings such as hospitals, stadia, educational buildings, residential buildings and others, do enhance the overall development of a nation (Chadwick, 1987).

Kunya (2012) identifiedthe solutions to the challenges that are facing housing maintenance in public and private housing facilities such as to monitor and document corrective actions, project expenditures, and accomplishments. Systematically identify maintenance needs, deficiencies and capital improvement needs at housing estates. Provision of accurate data for maintenance and construction programme decision making. Enable preparation of service maintenance and construction budget requests using systematic and standardized procedures, optimize the use of available funds, personnel, facilities and equipment through effective maintenance management methods; establish field station, regional, national and construction project priorities and determination of the unfunded maintenance backlog for the services.

3.0 Methodology

Field survey was the tool used in collecting data to evaluate the factors that are affecting housing maintenance and probable solutions to the housing maintenance problems in Nigeria. The questionnaire was administered to construction professionals (Architects, Builders, Quantity Surveyors, Engineers and other related disciplines).Questionnaire was developed to sample professional opinions on the probable causes of identified defects and to proffer remedies to same. About one hundred and twenty (120) questionnaires was distributed, ninety (90) were collected back for analysis. The statistical tools used for this study include percentage, mean, and relative significance index RSI (also known as Index of Relative Importance, IRI or

Relative Importance Index, RII) to determine which of the factors that are affecting housing maintenance and probable solutions to the housing maintenance problems in Nigerian.

The relative significance index ranking (RSI) was used for ranking of the factors studied. These methods had been used in construction research by authors such as, Elhag and Boussabaine (1999), Faniran (1999), Idrus and Newman (2002), Kangwa and Olubodun (2003) andOladapo (2006) among others.

Bakhary (2005) gave an equation that could be useful for determining Relative Significance Index (RSI) in prevalence data as:

$$RSI = \frac{\sum \mu}{AN}$$

Where μ is the weighting given to each factor by respondents;

A is the highest weight (i.e. 5 in this case);

N is the total number of respondents

But for this type of research work where a 5-point scale was used, the RSI shall be calculated via the equation:

$$RSI = \frac{5a + 4b + 3c + 2d + 1e}{jN} \qquad (0 \leq \text{index} \leq 1)$$

Where: a = number of respondents ‘‘extremely important and perfectly known’’,

b = number of respondents ‘‘very important and partially known’’

c = number of respondents ‘‘somewhat important and known’’

d = number of respondents ‘‘not very important and partially unknown’’

e = number of respondents ‘‘not important and perfectly unknown’’

N = sample size = 90

j = number of response categories = 5

4.0 Data Presentation and Analysis

The data were presented using tables for clarification and better interpretation. The analysis tools included both descriptive and inferential statistics.

4.1 Professions of the respondents

Table 1: Professions of the respondents

	Frequency	Percentage
Builders	23	25.56
Quantity Surveyors	16	17.78
Architects	19	21.11
Estate Surveyor and Managers	18	20.0
Engineers	14	15.56
Total	**90**	**100.0**

Table 1 showed respondents’ occupation. It showed that 25.56 percent are builders, 21.11 percent are architects, 20 are estate surveyors and managers, 17.78 percent are quantity surveyors and 15.56 percent constitutes estate surveyors and valuers.

4.2 Factors affecting the housing maintenance

Table 2 identified the factors affecting the housing maintenance in public and private housing facilities in Nigeria

Table 1: Factors affecting the housing maintenance

FACTORS	5	4	3	2	1	Total	TWV	RSI	Rank
Design and proper workmanship	72	12	3	0	3	90	420	0.933	1
Material specifications	42	33	9	6	0	90	381	0.847	2
Detailing of working drawings	39	36	3	6	6	90	366	0.813	4
Construction supervision	33	48	3	0	6	90	372	0.827	3
Cash flow analysis	24	24	30	6	6	90	324	0.72	5
Environmental factors	12	36	27	9	6	90	309	0.687	8
Users activities	18	33	21	15	3	90	318	0.707	6
Shifting values and modernizations	12	24	30	15	9	90	285	0.633	13
Inadequate waste management plan	12	24	21	24	9	90	276	0.613	15
Accidents	12	28	21	20	9	90	284	0.631	14
Solar radiation	9	15	30	24	12	90	255	0.567	17

Gradual depreciation	6	24	42	15	3	90	285	0.633	13
Ageing	9	42	27	6	6	90	312	0.693	7
Wear and tear	15	39	15	6	15	90	303	0.673	10
Preservation of historical background	9	39	27	3	12	90	300	0.667	11
Value of buildings	15	39	18	9	9	90	312	0.693	7
Alterations and modifications	3	42	24	12	9	90	288	0.64	12
Inadequate housing stock	6	30	24	21	9	90	273	0.607	16
Low quality of original construction	18	36	10	14	12	90	304	0.676	9
Social factors	6	6	48	15	15	90	243	0.540	18

Table 2 showed the relative significance index (RSI) of thefactors affecting the housing maintenance. Design and proper workmanshipranked first with an RSI value of 0.9338, material specifications ranked second with RSI value of 0.847 and construction supervision ranked third with an RSI value of 0.827. These are followed by detailing of working drawings (0.813). They made significant contributions to the conditions of the buildings thus observed.

4.2 Solutions to the challenges that are facing housing maintenance

Table 3: Solutions to the factors that are facing housing maintenance.

SOLUTIONS	5	4	3	2	1	Total	TWV	RSI	Rank
Monitor and document corrective actions, project expenditures, and accomplishments.	54	27	3	3	3	90	396	0.880	1
Systematically identify maintenance needs, deficiencies and capital improvement needs at housing estates.	27	48	9	3	3	90	363	0.807	3
Provide accurate data for maintenance and construction programme decision making.	39	36	9	3	3	90	375	0.833	2
Enable preparation of service maintenance and construction budget requests using systematic and standardized procedures.	36	33	12	6	3	90	363	0.807	3
Optimize the use of available funds, personnel, facilities and equipment through effective maintenance management methods.	21	24	36	6	3	90	324	0.72	4
Establish field station, regional, national and construction project priorities.	21	27	18	15	9	90	306	0.680	5
Determine the unfunded maintenance backlog for the services.	12	30	21	21	6	90	291	0.647	6

Table 3 showed the solutions to the factors that are facing housing maintenance in Nigeria. The common solution to the housing maintenance is themonitoring and documentation of corrective actions, project expenditures, and accomplishments. This solution was ranked first with an RSI value of0.880. Provision of accurate data for maintenance and construction programme decision making ranked second with an RSI value of 0.833. Systematically identify maintenance needs, deficiencies, capital improvement needs at housing estates and preparation of service maintenance and construction budget requests using systematic and standardized procedures were ranked third with an RSI value of 0.807. These are followed by establishment of the field station, regional, national and construction project priorities (0.680) anddetermination of the unfunded maintenance backlog for the services (0.647)**.**

4.3 Discussion of findings

The buildings or housing is a combination of related parts organised into a complex wide.Twenty factors were identified in the sampled buildings in the covered areas. Design and proper workmanshipranked first with an RSI value of 0.9338, material specifications ranked second with RSI value of 0.847 and construction supervision ranked third with an RSI value of 0.827. These are followed by detailing of working drawings (0.813).

Solutions were, thus, proposed in order to reduce the factors that are affecting the housing maintenance. The common solution to the housing maintenance is the monitoring and documentation of corrective actions, project expenditures, and accomplishments. Followed by provision of accurate data for maintenance and construction programme decision making, systematically identify maintenance needs, deficiencies, capital improvement needs at housing estates, preparation of service maintenance and construction budget requests using systematic and standardized procedures. Others are followed by establishment of the field station, regional, national and construction project priorities and determination of the unfunded maintenance backlog for the services**.**

5.0 Conclusion

Design and proper workmanship of the affected and sampled housings was discovered. There should be a relationship between material specifications and construction supervision. Gradual depreciation, ageing, wear and tear. Preservation of historical background and value of buildings is to encourage the housing maintenance by given adequate care of the building.

6.0 Recommendations

The following recommendations are hereby made:

i Skilled artisan and competent workers should be used.
ii Building professionals should participate in design and proper workmanship,
iii The building materials to be used for construction must be strictly adhere to its specifications,
iv There must be adequate construction supervision and detailing of working drawings,

REFERENCES

[1]. **Adenuga, O.A. (1999):** Building Maintenance in Nigeria: Structural Deterioration, Recognition Diagnosis of Causes and Remedies. (01): 5-25

[2]. **Agbola, S. B. (1998):** The housing of Nigerians: a review of policy development and implementation. Research Report, (14): ii

[3]. **Bakhary, N. (2005):** "Arbitration in Malaysia Construction Industry" Retrieved 12th January, 2008 from http://www.efka.utm.my/thesis/images/4MASTER/2005/2JSBP/Part1/CHOOTZERCHING MA011138D03TT1.doc

[4]. **British Standard Institution, BSI (1974):** Glossary of General Term Used in Maintenance Organisation, BSI, London.

[5]. **Bala,K and Bustani, S.A. (2012)**: A review of housing delivery efforts in Nigeria. http://www.gla.ac.uk/media/media_129767_en.pdf. Retrieved Wednesday 22 August,2012 09:11 Administrator.

[6]. **Bichi, K.M. (2002):** Housing the Nigerian population: problems and prospects. Journal of the Federal Mortgage Bank of Nigeria, 1(5) 30-31.

[7]. **Chadwick, G. (1987):** Model of Urban and Regional System in Developing Countries-Some Theories and their Applications in Physical Planning. Pergamon Press Oxford. Pp. 17-73

[8]. **Chudley, R.(1987):** Construction Technology. Longman Singapore Publishers, Singapore.

[9]. **Encarta Dictionaries,** Encarta Premium DVD, Electronic Dictionaries on Information systems, 2009.

[10]. **Elhag, T.M.S. &Boussabaine, A.H. (1999):** "Evaluation of Construction Costs and Time Attributes", *Proceedings of the 15th ARCOM Conference. Vol. 2*, Liverpool John Moores University, 2,473-480, 15-17 September.

[11]. **Faniran, O.O. (1999):** "The Role of Construction Project Planning in Improving Project Delivery in Developing Countries: Case Study of the Nigerian Construction Industry", *Proceedings of the 1st conference of CIB TG 29 on construction in Developing Countries: Construction Industry Development in the New Millenium*. The Pan Pacific, Sigapore. http:/buidnet.csir.co.za/cdcproc.docs/1st procedings.htm1#key

[12]. **Idrus, A.B. & Newman, J.B. (2002):** "Construction Related Factors Influencing Choice of Concrete Floor Systems", *Construction Management and Economics*, 20, 13-19.

[13]. **Adetomiwa A. (2010):** Facility Management Unpublished Msc Housing Development and Management Seminar papers. University of Ibadan, Nigeria.

[14]. **Iyagba R.O.A (2005):**The menace of sick of buildings- a challenge to all for its prevention and treatment. An inaugural lecture delivered at University of Lagos, Lagos-Nigeria.

[15]. **Kangwa, J. &Olubodun, F. (2003):** "An investigation into Home Owner Maintenance Awareness, Management and Skill-Knowledge Enhancing Attributes", *Structural Survey, 21,2.70-78*.

[16]. **Kunya, S.U. (2012):** Maintenance Management Unpublished MTech Construction Management Lecture Notes. Building Programme, Faculty of Environmental Technology, Abubakar Tafawa Balewa University of Technology, Bauchi, Nigeria.

[17]. **Ogieto, Y. I. (1987:**) Shelter provision in Nigeria: some thoughts on housingsubsidies. Federal Mortgage Bank of Nigeria Journal, 2 (1): 11-17.

[18]. **Ojara, E.S. (2013):** The Challenges of Housing Maintenance in Nigeria. Unpublished HND Project, Department of Building Technology, The Federal Polytechnic Ado Ekiti, Nigeria.

[19]. **Okupe, L. and Windapo, C. (2000):** The role of private sector in housing delivery in Nigeria. A seminar paper on effective approach to housing delivery in Nigeria, Organized by Nigerian Institute of Building, Ibadan.

[20]. **Oladapo, A.A.(2006):** "The Impact of ICT on Professional Practice in the Nigerian Construction Industry", *The Electronic Journal on Information Systems in Developing Countries*. 24, 2, 1-19 http://www.ejisdc.org

[21]. **Olotuah, A.O. (2000)**. Housing Low-Income Civil Servants in an Emergent State Capital – the case study of Ado-Ekiti, Unpublished Ph.D Thesis, Federal University of Technology, Akure, Nigeria

[22]. **Sanni,L. (2010):** Appraise the Nigerian housing policy till 2000. Term paper for Msc housing students of Urban and Regional Planning, University of Ibadan.

[23]. **Siyanbola, A.B., Ogunmakinde, O.E. and Akinola, A.A. (2013):** Analysis of the Factors Affecting Building Maintenance in Government Residential Estates in Akure, Ondo State, Nigeria.

[24]. **Wahab,B (2007):**Element of rural housing, Housing Development and Management,Malijoe softprint, Ibadan, pp. 434-435

[25]. **Wahab K.A.,Adedokun,L.A. and Onibokun,A.G. (1990):** "Urban Housing Condition" In Urban Housing in Nigeria. NISER, Ibadan. Pp99-140